SIAM J. MATH. ANAL.
Vol. 51, No. 3, pp. 1965–1998

A MULTIMATERIAL TRANSPORT PROBLEM AND ITS CONVEX RELAXATION VIA RECTIFIABLE G-CURRENTS*

ANDREA MARCHESE†, ANNALISA MASSACCESI‡, AND RICCARDO TIONE§

Abstract. In this paper we study a variant of the branched transportation problem, that we call the multimaterial transport problem. This is a transportation problem, where distinct commodities are transported simultaneously along a network. The cost of the transportation depends on the network used to move the masses, as is common in models studied in branched transportation. The main novelty is that in our model the cost per unit length of the network does not depend only on the total flow, but on the actual quantity of each commodity. This allows us to take into account different interactions between the transported goods. We propose an Eulerian formulation of the discrete problem, describing the flow of each commodity through every point of the network. We prove existence of solutions under minimal assumptions on the cost. Moreover, we prove that, under mild additional assumptions, the problem can be rephrased as a mass minimization problem in a class of rectifiable currents with coefficients in a group, allowing us to introduce a notion of calibration. The latter result is new even in the well-studied framework of the "single-material" branched transportation.

Key words. branched transportation, rectifiable currents, calibrations, multimaterial transport problem

AMS subject classifications. 49Q10, 49Q15, 49Q20, 53C38, 90B06, 90B10

DOI. 10.1137/17M1162858

Introduction. In this paper we study the *multimaterial transport problem*, (MMTP). Informally, given two arrays

$$\mu^- = (\mu_1^-, \dots, \mu_m^-), \quad \mu^+ = (\mu_1^+, \dots, \mu_m^+)$$

of discrete positive measures on $\mathbb{R}^d$, we study transportation networks between μ^- and μ^+ of the form $T = (T_1, \dots, T_m)$, where each T_i is a vector valued measure on $\mathbb{R}^d$ (with values also in $\mathbb{R}^d$) having distributional divergence

$$\operatorname{div}(T_i) = \mu_i^- - \mu_i^+ \qquad \forall\, i = 1, \dots, m\,. \tag{0.1}$$

More precisely, we will consider only transportation networks with a certain structure, namely, we require that there exists a 1-rectifiable set $E \subset \mathbb{R}^d$ (endowed with a unit vector field τ, orienting the approximate tangent of E) and for every $i = 1, \dots, m$ a subset $E_i \subset E$ and a multiplicity $\theta_i \in \mathbb{Z}$ such that

$$T_i := \theta_i \tau \mathscr{H}^1 \llcorner E_i,$$

where the latter means that, for every continuous and compactly supported vector

*Received by the editors December 26, 2017; accepted for publication (in revised form) March 6, 2019; published electronically May 16, 2019.
http://www.siam.org/journals/sima/51-3/M116285.html
Funding: The work of the first author was supported by the ERC grant 306247 Regularity of area minimizing currents. The work of the authors was supported by the European Union's Horizon 2020 research and innovation programme under grant 752018 (CuMiN).
†Dipartimento di Matematica "F. Casorati," Università degli Studi di Pavia (andrea.marchese@unipv.it).
‡Department of Computer Science, University of Verona (annalisa.massaccesi@univr.it).
§Mathematik Institut der Universität Zürich (riccardo.tione@math.uzh.ch).

field v on $\mathbb{R}^d$, we have

$$\langle T_i, v\rangle = \int_{E_i} \langle \tau(x); v(x)\rangle \theta_i(x)\, d\mathscr{H}^1(x)\,.$$

Then we associate with T

- the multiplicity $\theta = (\theta_1, \dots, \theta_m)$, which is a function on E with values in $\mathbb{Z}^m$,
- the vector valued measure on $\mathbb{R}^d$ (with values in $\mathbb{R}^{d\times m}$)

$$T := (\tau \otimes \theta)\mathscr{H}^1 \llcorner E,$$

- and the energy

$$\mathbb{E}(T) := \int_E \mathcal{C}(\theta)\, d\mathscr{H}^1, \tag{0.2}$$

  where $\mathcal{C} : \mathbb{Z}^m \to [0, +\infty)$ is a *cost function*.

The MMTP consists in the minimization of the energy (0.2) under the constraint (0.1).

We briefly step back for a heuristic introduction to the problem. In optimal transport problems one can focus on specific (concave) costs, which favor the aggregation of moved particles and generate optimal structures with branching. The branched transport problem is named after this peculiar phenomenon. A great interest has been devoted to branched transportation problems in recent years, providing several results concerning existence of solutions [42, 30, 3, 2, 11, 37, 18], regularity and stability [43, 7, 22, 21, 35, 44, 8, 10, 16, 15, 17], and strategies to compute minimizers or to prove minimality of concrete configurations [36, 6, 14, 34, 5, 4, 32, 31, 29].

Nonetheless, to our knowledge only problems involving the transport of one (homogeneous) material have been studied and modeled as variational problems. These models do not apply in planning a network for the transportation of different goods, whose mutual interactions require a formulation which involves several variables. The easiest examples of a natural MMTP concern mixed-use roads (where vehicles of different sizes and pedestrians are allowed to circulate) and the transport through vehicles of goods and passengers.

Another notable example is given by the power line communications (PLC) technology (see [26, 23]), which uses the electric power distribution network for data transmission. PLC was introduced into the United States of America more than a century ago and used for communications of moving trains or, more generally, for maintenance operations of the electric power network. Recently, a special type of PLC, the broadband over power lines is being studied and improved for high-speed data transmission, being particularly convenient for isolated areas. Electric power and data signals are impossible to treat as a homogeneous "material" for several reasons, the main one being the fact that electricity and internet supply are subject to different costs, depending on the users' concentration and demands.

Similar problems, usually grouped under the name of multicommodity flow problems, were studied (see, e.g., [28, 24]) as minimization problems on graphs, often also considering constraints on the capacity of the network. Up to now, the aim of the research in this area was mainly devoted to studying the complexity of the problem and to improving the efficiency of algorithms for numerical solutions.

The main results of the present paper are the existence of solutions to the minimization of the energy (0.2) under the constraint (0.1) with minimal assumptions

on the cost $\mathcal{C}$ (Theorem 2.3) and, under mild additional assumptions, the equivalence between the MMTP and a mass minimization problem in a class of rectifiable currents with coefficients in a group (Theorem 2.4). The equivalence between the two problems allows us to introduce the notion of calibrations in this context. This was initiated in previous works [32, 31] for "single-material" branched transportation problems and for very special choices of the cost functionals (i.e., the Steiner cost and the Gilbert–Steiner α-mass, respectively) and the benefit of introducing calibrations in such contexts is witnessed, e.g., by [34, 5, 12, 13]. Under our general assumptions on the cost, the equivalence result is new even in the case of single-material transportation problems.

1. Notation and preliminaries. Consider a norm $\|\cdot\|$ on $\mathbb{R}^n$ and its dual norm $\|\cdot\|^*$. The Euclidean norm is instead denoted by $|\cdot|$ and we will always denote an orthonormal basis of $(\mathbb{R}^n, |\cdot|)$ by $\{\mathbf{e}_1, \dots, \mathbf{e}_n\}$. The scalar product between vectors v and w of $\mathbb{R}^n$ is denoted $\langle v; w\rangle$. Our aim is to define (1-dimensional) *currents in* $\mathbb{R}^d$ *with coefficients in* $(\mathbb{R}^n, \|\cdot\|)$. Through the paper we will always use d for the dimension of the ambient space. In section 2, two quantities m and N will arise in our variational problem and we will work with currents with coefficients in $\mathbb{R}^m$ and $\mathbb{R}^N$, respectively. The letter n, used in this preliminary section, stands for the dimension of the vector space of coefficients of our currents. In the following, one can refer to the definitions of this section replacing $n = m$ or $n = N$.

Currents with coefficients in a normed (abelian) group $(G, |\cdot|_G)$ have been introduced in [27] and already studied by several authors (see [40, 41, 20]). Our interest is restricted to the case $(G, |\cdot|_G) = (\mathbb{R}^n, \|\cdot\|)$, and we follow a "nonstandard" approach, defining currents by duality with $\mathbb{R}^n$-valued differential forms in $\mathbb{R}^d$ (instead of completing the space of polyhedral $\mathbb{R}^n$-chains). With this approach we obtain an integral representation of currents, (see (1.1)) which allows us to introduce calibrations in a natural way.

We introduce now some notation about currents with coefficients in $(\mathbb{R}^n, \|\cdot\|)$. For the rest of this section, we will often drop the norm $\|\cdot\|$, meaning that we will write $\mathbb{R}^n$-valued 1-covector/differential form or 1-current with coefficients in $\mathbb{R}^n$ instead of $(\mathbb{R}^n, \|\cdot\|)$-valued 1-covector/differential 1-form or 1-currents with coefficients in $(\mathbb{R}^n, \|\cdot\|)$. We limit ourselves to define what is strictly necessary for the purposes of our paper. To begin with, we give the following definitions.

DEFINITION 1.1 ($\mathbb{R}^n$-valued 1-covector). *A map* $\alpha : \mathbb{R}^d \times \mathbb{R}^n \to \mathbb{R}$ *is an* $\mathbb{R}^n$-valued 1-covector *in* $\mathbb{R}^d$ *if*

(i) $\forall\, \tau \in \mathbb{R}^d,\ \alpha(\tau, \cdot) \in (\mathbb{R}^n)^*$;

(ii) $\forall\, \theta \in \mathbb{R}^n,\ \alpha(\cdot, \theta) : \mathbb{R}^d \to \mathbb{R}$ *is a "classical"* 1-*covector.*

The evaluation of α *on the pair* (τ, θ) *is also denoted by* $\langle \alpha; \tau, \theta\rangle$. *The space of* $\mathbb{R}^n$-*valued* 1-*covectors in* $\mathbb{R}^d$ *is denoted by* $\Lambda^1(\mathbb{R}^d; \mathbb{R}^n)$.

Observe that the space $\Lambda^1(\mathbb{R}^d; \mathbb{R}^n)$ is a normed vector space when endowed with the comass norm

$$\|\alpha\|_c := \sup\{\|\alpha(\tau, \cdot)\|^* : |\tau| \le 1, \tau \in \mathbb{R}^d\}.$$

We can write the action of an $\mathbb{R}^n$-valued 1-covector α as

$$\alpha(\tau, \theta) = \sum_{j=1}^{n} \alpha_j(\tau)\langle \mathbf{e}_j; \theta\rangle,$$

where, for $j = 1, \dots, n$, $\alpha_j := \alpha(\cdot, \mathbf{e}_j)$ are the *components* of α.

Fix now a convex open set $U \subset \mathbb{R}^d$. It is clear that such an assumption is not restrictive for most of the reasonable cases, nonetheless we remark that other choices of U could change the homology class in which we set the variational problem.

DEFINITION 1.2 ($\mathbb{R}^n$-valued differential 1-form). *An* $\mathbb{R}^n$-valued differential 1-form in U *is a map* $\omega : U \to \Lambda^1(\mathbb{R}^d;\mathbb{R}^n)$. *We say that* ω *is* smooth *if and only if every component* ω_j *belongs to* $C^\infty(U;\Lambda^1(\mathbb{R}^d;\mathbb{R}))$, *where the components of an* $\mathbb{R}^n$*-valued differential* 1*-form are defined similarly to the components of an* $\mathbb{R}^n$*-valued* 1*-covector. We denote by* $C_c^\infty(U;\Lambda^1(\mathbb{R}^d;\mathbb{R}^n))$ *the vector space of smooth,* $\mathbb{R}^n$*-valued differential* 1*-forms, with compact support in* U.

Finally, we define the *comass norm* of the $\mathbb{R}^n$-valued differential 1-form ω as

$$\|\omega\|_c := \sup_{x\in U} \|\omega(x)\|_c.$$

The exterior derivative of an $\mathbb{R}^n$-valued function (0-form) is once again defined using the components.

DEFINITION 1.3 (exterior derivative of an $\mathbb{R}^n$-valued 0-form). *Let* $\eta \in C_c^\infty(U;\mathbb{R}^n)$ *be an* $\mathbb{R}^n$*-valued* 0*-form and, for* $j = 1,\dots,n$, *denote with* η_j *its components (i.e.,* $\eta_j := \langle \eta; \mathbf{e}_j\rangle$*). Then the* exterior derivative *of* η *is the* $\mathbb{R}^n$*-valued differential* 1*-form which is defined componentwise by*

$$(\mathrm{d}\eta)_j := \mathrm{d}(\eta_j), \quad j = 1,\dots,n.$$

We are now ready to define 1-currents with coefficients in $\mathbb{R}^n$.

DEFINITION 1.4 (1-currents with coefficients in $\mathbb{R}^n$). *Let* T *be a linear functional on* $C_c^\infty(U;\Lambda^1(\mathbb{R}^d,\mathbb{R}^n))$. *By definition,* T *is continuous if* $T(\omega^i) \to 0$ *for every sequence of* $\mathbb{R}^n$*-valued differential* 1*-forms* $\omega^i \in C^\infty(U;\Lambda^1(\mathbb{R}^d,\mathbb{R}^n))$ *such that*

(i) $\mathrm{spt}(\omega^i) \subset K$ *for some compact set* $K \subset U$*;*

(ii) *every component of* ω^i *converges uniformly to* 0 *with all its derivatives when* $i \to \infty$.

The space of linear, continuous functionals on $C_c^\infty(U;\Lambda^1(\mathbb{R}^d,\mathbb{R}^n))$ *is the space of* 1-currents in U with coefficients in $\mathbb{R}^n$. *We write* $T^i \overset{*}{\rightharpoonup} T$ *when the sequence of currents* $(T^i)_{i\geq 1}$ *with coefficients in* $\mathbb{R}^n$ *is weakly*-converging to* T, *i.e., when*

$$T^i(\omega) \to T(\omega) \quad \forall\, \omega \in C_c^\infty(U;\Lambda^1(\mathbb{R}^d,\mathbb{R}^n)).$$

Furthermore, if T *is a* 1*-current with coefficients in* $\mathbb{R}^n$, *we define its* mass *as*

$$\mathbb{M}(T) := \sup\{|T(\omega)| : \|\omega\|_c \leq 1\}.$$

The boundary *of* T *is the* $\mathbb{R}^n$*-valued distribution* ∂T *which fulfills the relation*

$$\partial T(\eta) := T(\mathrm{d}\eta) \quad \forall \eta \in C_c^\infty(U;\mathbb{R}^n).$$

Finally, when we mention the components *of the current* T, *we refer to the classical currents* T_j, $j = 1,\dots,n$, *defined as*

$$T_j(\omega) := T(\omega\mathbf{e}_j) \quad \forall\, \omega \in C^\infty(U;\Lambda^1(\mathbb{R}^d;\mathbb{R})),$$

where we denoted by $\omega\mathbf{e}_j$ *the* $\mathbb{R}^n$*-valued differential* 1*-form whose* j*th component coincides with* ω *and all other components are all null.*

Remark 1.5. Analogously, the definitions of $\mathbb{R}^n$-valued k-covectors, $\mathbb{R}^n$-valued differential k-forms, and k-currents with coefficients in $\mathbb{R}^n$ are given by specifying their components, i.e., an array made of n classical k-covectors, differential k-forms, and k-currents, respectively. Similarly, the definitions of the exterior derivative of an $\mathbb{R}^n$-valued differential k-form and of the boundary of a k-current with coefficients in $\mathbb{R}^n$ are understood.

Remark 1.6. Notice that, if T is a current with coefficients in $\mathbb{R}^m$ with at most one nontrivial component T_j, then the mass $\mathbb{M}(T)$ differs from the classical mass of T_j by a multiplicative constant, namely, the ratio between the Euclidean norm on $\mathbb{R}$ and the restriction of the norm $\|\cdot\|$ on $\mathrm{span}(e_j)$. Therefore, to avoid a possibly misleading abuse of notation, we denote by $\mathbb{M}$ the mass of classical currents.

We are going to consider the following special class of currents. We recall that a 1-*rectifiable set* $E \subset U$ is an $\mathscr{H}^1$-measurable set which can be covered, up to an $\mathscr{H}^1$-null subset, with the images of countably many curves of class C^1. A 1-rectifiable set E has a well-defined notion of tangent line at $\mathscr{H}^1$-a.e. point $x \in E$, which is denoted $\mathrm{Tan}(E, x)$.

Definition 1.7 (rectifiable 1-currents with coefficients in $\mathbb{Z}^n$). *A* rectifiable 1-current in U with coefficients in $\mathbb{Z}^n$ *is a* 1-*current with coefficients in* $\mathbb{R}^n$ *with finite mass admitting the integral representation*

$$T(\omega) = \int_\Sigma \langle \omega(x); \xi(x), \theta(x)\rangle \, d\mathscr{H}^1(x) \quad \forall\, \omega \in C^\infty(U; \Lambda^1(\mathbb{R}^d; \mathbb{R}^n)), \tag{1.1}$$

where $\Sigma \subset U$ *is a countably* 1-*rectifiable set,* $\xi(x) : \Sigma \to \mathbb{S}^{d-1} \cap \mathrm{Tan}(E, x)$ *for* $\mathscr{H}^1$*-a.e.* x *is called the orientation, and* $\theta \in L^1_{\mathrm{loc}}(\Sigma; \mathbb{Z}^n)$ *is the multiplicity. We denote such a current* T *as* $[\![\Sigma, \xi, \theta]\!]$.

We have the following characterization of the mass of a rectifiable current (see [38, 26.8] for the analogous statement for classical currents).

Lemma 1.8 (characterization of the mass). *If* $T = [\![\Sigma, \xi, \theta]\!]$ *is a rectifiable* 1-*current with coefficients in* $\mathbb{Z}^n$*, then*

$$\mathbb{M}(T) = \int_\Sigma \|\theta(x)\| \, d\mathscr{H}^1(x).$$

For the rest of the paper, we mainly focus on rectifiable 1-currents with coefficients in $\mathbb{Z}^n$ whose boundary has finite mass. With a small abuse of notation we call them *1-dimensional integral* $\mathbb{Z}^n$*-currents.* The following structure theorem for 1-dimensional integral $\mathbb{Z}^n$-currents is an immediate consequence of its counterpart for classical integral 1-currents [25, 4.2.25]. See also [19, Theorem 2.5]. Roughly speaking, it states that a 1-dimensional integral $\mathbb{Z}^n$-current can be thought of simply as a superposition of oriented curves with (vectorial) multiplicities.

Theorem 1.9 (structure of 1-dimensional integral $\mathbb{Z}^n$-currents). *Let* $T = [\![\Sigma, \tau, \theta]\!]$ *be a* 1-*dimensional integral* $\mathbb{Z}^n$*-current in* U*. Then*

$$T = \sum_{k=1}^{M} \tilde{T}^k + \sum_{h=1}^{\infty} \mathring{T}^h,$$

where

- $\tilde{T}^k = [\![\Gamma_k, \tau_k, \tilde{\theta}_k]\!]$, Γ_k *being the image of an injective, Lipschitz, open curve* $\gamma_k : [0,1] \to U$, $\tau_k(\gamma_k(t)) = \frac{\dot{\gamma}_k(t)}{|\dot{\gamma}_k(t)|}$ *for a.e.* t, *and* $\tilde{\theta}_k \in \mathbb{Z}^n$ *being constant on* Γ_k. *Moreover, for* $j = 1, \dots, n$ *it holds*

$$\sum_{k=1}^{M} |(\tilde{\theta}_k(x))_j| \leq \frac{1}{2}\mathbb{M}(\partial T_j) \quad \text{for } \mathscr{H}^1 \text{ a.e. } x \in \textstyle\bigcup_{k=1}^{M} \Gamma_k. \tag{1.2}$$

Additionally, for $j = 1, \dots, n$ *it holds*

$$\left|\sum_{k=1}^{M} \langle \tau_k(x); \tau(x)\rangle (\tilde{\theta}_k(x))_j\right| \leq |(\theta(x))_j| \quad \text{for } \mathscr{H}^1 \text{ a.e. } x \in \textstyle\bigcup_{k=1}^{M} \Gamma_k \tag{1.3}$$

and in the inequality above the two quantities $\sum_{k=1}^{M} \langle \tau_k(x); \tau(x)\rangle (\tilde{\theta}_k(x))_j$ *and* $(\theta(x))_j$ *have the same sign;*
- $\mathring{T}^h = [\![Z_h, \nu_h, \mathring{\theta}_h]\!]$, Z_h *being the image of a Lipschitz, closed curve* $\zeta_h : [0,1] \to U$, *which is injective on* $(0,1)$, $\nu_h(\zeta_h(t)) = \frac{\dot{\zeta}_h(t)}{|\dot{\zeta}_h(t)|}$ *for a.e.* t, *and* $\mathring{\theta}_h \in \mathbb{Z}^n$ *being constant on* Z_h.

1.1. Compactness. The following compactness theorem holds.

THEOREM 1.10 (compactness). *Consider a sequence* $(T^l)_{l\in\mathbb{N}}$ *of* 1*-dimensional integral* $\mathbb{Z}^n$*-currents in* U *such that*

$$\sup_{l\in\mathbb{N}} \big(\mathbb{M}(T^l) + \mathbb{M}(\partial T^l)\big) < +\infty\,.$$

Then there exists a 1*-dimensional integral* $\mathbb{Z}^n$*-current* T *in* U *and a subsequence* $\big(T^{l_r}\big)_{r\in\mathbb{N}}$ *such that*

$$T^{l_r} \overset{*}{\rightharpoonup} T\,.$$

Moreover it holds

$$\liminf_{r\to\infty} \mathbb{M}(T^{l_r}) \geq \mathbb{M}(T).$$

The proof of this result is a straightforward application of the closure theorem for integral currents (see [25, 4.2.16]) to each component T^l_j of the elements of the sequence $(T^l)_{l\in\mathbb{N}}$. The lower semicontinuity of the mass is straightforward. By direct methods we get the existence of a mass-minimizing rectifiable current for a given boundary.

COROLLARY 1.11. *Let* $T^\flat$ *be a* 1*-dimensional integral* $\mathbb{Z}^n$*-current in* U. *Then there exists a* 1*-dimensional integral* $\mathbb{Z}^n$*-current* $T^\sharp$ *in* U *such that*

$$\mathbb{M}(T^\sharp) = \min_{\partial T = \partial T^\flat} \mathbb{M}(T)\,,$$

where the minimum is computed among 1*-dimensional integral* $\mathbb{Z}^n$*-currents in* U.

1.2. Calibrations. The main advantage of proving the equivalence between the MMTP and a mass minimization problem is that, in the latter case, we can make use of calibrations to prove minimality.

DEFINITION 1.12 (calibration). *Consider a rectifiable* 1*-current* $T = [\![\Sigma, \tau, \theta]\!]$ *in* U, *with coefficients in* $\mathbb{Z}^n$. *A smooth* $\mathbb{R}^n$*-valued differential* 1*-form* ω *in* U *is a* calibration *for* T *if the following conditions hold:*

(i) *for a.e.* $x \in \Sigma$ *we have that* $\langle \omega(x); \tau(x), \theta(x) \rangle = \|\theta(x)\|$*;*
(ii) *the form is* closed*, i.e.,* $\mathrm{d}\omega = 0$*;*
(iii) *for every* $x \in U$*, every unit vector* $\tau \in \mathbb{R}^d$ *and every* $\eta \in \mathbb{R}^n$ *we have that*

$$\langle \omega(x); \tau, \eta \rangle \leq \|\eta\| .$$

The existence of a calibration is a sufficient condition for minimality.

THEOREM 1.13 (minimality of calibrated currents). *Let* $T = [\![\Sigma, \tau, \theta]\!]$ *be a rectifiable* 1*-current in* U*, with coefficients in* $\mathbb{Z}^n$*, and let* ω *be a calibration for* T*. Then* T *minimizes the mass among rectifiable 1-currents in* U *with coefficients in* $\mathbb{Z}^n$ *with the same boundary* ∂T*.*

Proof. A competitor $T' = [\![\Sigma', \tau', \theta']\!]$ satisfies $\partial T' = \partial T$. Since U is convex, there exists a 2-dimensional current R in U, with coefficients in $\mathbb{R}^n$, such that $\partial R = T - T'$. As a consequence, together with the properties of ω listed in Definition 1.12, we obtain that

$$\begin{aligned}
\mathbb{M}(T) &= \int_\Sigma \|\theta(x)\| \, d\mathscr{H}^1(x) \\
&\overset{\text{(i)}}{=} \int_\Sigma \langle \omega(x); \tau(x), \theta(x) \rangle \, d\mathscr{H}^1(x) = \partial R(\omega) + T'(\omega) \\
&\overset{\text{(ii)}}{=} \int_{\Sigma'} \langle \omega(x); \tau'(x), \theta'(x) \rangle \, d\mathscr{H}^1(x) \\
&\overset{\text{(iii)}}{\leq} \int_{\Sigma'} \|\theta'(x)\| \, d\mathscr{H}^1(x) = \mathbb{M}(T') . \qquad \square
\end{aligned}$$

2. Multimaterial transport problem. In this section, we define the MMTP and we state the main result of the paper. First of all, let us introduce some notation. Our ambient is the Euclidean space $\mathbb{R}^d$. For $n = 1, 2, \ldots$, we consider the following partial order on $\mathbb{R}^n$, where the coordinates are always expressed with respect to the standard basis $\{\mathbf{e}_1, \ldots, \mathbf{e}_n\}$. Given two vectors $x = (x_1, \ldots, x_n)$ and $y = (y_1, \ldots, y_n)$, we write $x \preceq y$ if and only if

$$|x_j| \leq |y_j| \quad \text{and} \quad x_j y_j \geq 0 \quad \forall j = 1, \ldots, n. \tag{2.1}$$

We say that a norm $\|\cdot\|$ on $\mathbb{R}^n$ is *monotone* if $\|x\| \leq \|y\|$ for every $x \preceq y \in \mathbb{R}^n$. We say that $\|\cdot\|$ is *absolute* if $\|x\| = \|\bar{x}\|$ $\forall x \in \mathbb{R}^n$, where $\bar{x} = (|x_1|, \ldots, |x_n|)$. Now we fix an integer $m \in \mathbb{N}$ (which represents the number of different types of commodities involved in the transportation problem).

DEFINITION 2.1 (multimaterial cost). *A* multimaterial cost *is a function* $\mathcal{C} : \mathbb{Z}^m \to [0, +\infty)$ *with the following properties:*
(i) $\mathcal{C}$ *is even, i.e.,* $\mathcal{C}(x) = \mathcal{C}(-x)$*, and* $\mathcal{C}(x) = 0$ *if and only if* $x = 0$*.*
(ii) $\mathcal{C}$ *is increasing, i.e.,* $\mathcal{C}(x) \leq \mathcal{C}(y)$ *for every* $x \preceq y$*.*
(iii) $\mathcal{C}$ *is subadditive, i.e.,* $\mathcal{C}(x + y) \leq \mathcal{C}(x) + \mathcal{C}(y)$ *for every* $x, y \in \mathbb{Z}^m$*.*
In order to prove the equivalence between the MMTP and a mass minimization problem, we will replace (iii) *with a stronger property, namely,*
(iii′) *there exists a monotone norm* $\|\cdot\|_\star$ *on* $\mathbb{R}^m$ *with respect to which* $\mathcal{C}$ *is sublinear, i.e.,* $\frac{\mathcal{C}(x)}{\|x\|_\star} \leq \frac{\mathcal{C}(x')}{\|x'\|_\star}$ *for every* $x, x' \in \mathbb{Z}^m \setminus \{0\}$ *with* $x' \preceq x$*.*

Remark 2.2 (extension of multimaterial costs). If $\mathcal{C}$ is defined only on a rectangle

$$R := [-a_1, a_1] \times \cdots \times [-a_m, a_m] \subset \mathbb{Z}^m$$

and it satisfies (i), (ii), (iii) (respectively (i), (ii), (iii′)) on R, then one can define a new cost $\bar{\mathcal{C}} : \mathbb{Z}^m \to [0, +\infty]$ defining

$$\bar{\mathcal{C}}(x) := \max_{y \in R} \{\mathcal{C}(y) : y \preceq x\}.$$

One can see immediately that the cost $\bar{\mathcal{C}}$ satisfies (i), (ii), (iii) (respectively (i), (ii), (iii′)).

A multimaterial cost induces a functional on 1-dimensional integral $\mathbb{Z}^m$-currents, that we denote $\mathbb{E}$. Given a 1-dimensional integral $\mathbb{Z}^m$-current $T = [\![\Sigma, \tau, \theta]\!]$, we denote its energy by

$$\mathbb{E}(T) := \int_\Sigma \mathcal{C}(\theta)\, d\mathscr{H}^1 . \tag{2.2}$$

Let us now fix a rectifiable 0-current $\mathcal{B}$ on $\mathbb{R}^d$ with coefficients in $\mathbb{Z}^m$, which is the boundary of a 1-dimensional integral $\mathbb{Z}^m$-current. In particular $\mathcal{B}$ is represented by the discrete $\mathbb{R}^n$-valued measure

$$\mathcal{B} = \sum_{\ell=1}^{M} \eta_\ell \delta_{p_\ell}, \tag{2.3}$$

where p_ℓ are points in $\mathbb{R}^d$, $\eta_\ell = (\eta_{\ell,1}, \ldots, \eta_{\ell,m}) \in \mathbb{Z}^m$, and $\sum_{\ell=1}^{M} \eta_\ell = (0, \ldots, 0) \in \mathbb{Z}^m$.

If we read the problem as an optimization problem for the transportation of different goods among factories, the interpretation of $\mathcal{B}$ as a given datum should be the following. At each of the M points p_ℓ a certain amount of some of the m materials is produced or requested. A negative sign in the coefficient $\eta_{\ell,i}$ represents the fact that an amount $|\eta_{\ell,i}|$ of the material indexed by i is produced by the factory located at the point p_ℓ, while a positive sign represents the fact that the corresponding amount is requested by that factory.

We are now able to state the MMTP. Let $\mathcal{C}$ satisfy properties (i), (ii), (iii) of Definition 2.1.

(MMTP:) Among all 1-dimensional integral $\mathbb{Z}^m$-currents $T = [\![\Sigma, \tau, \theta]\!]$ in $\mathbb{R}^d$ such that $\partial T = \mathcal{B}$, find one which minimizes the energy $\mathbb{E}(T)$.

THEOREM 2.3 (existence of solutions). *The MMTP admits a solution.*

Proof. The proof goes through the direct method of the calculus of variations. The lower semicontinuity of the functional $\mathbb{E}$ is stated in [41, section 6] (see also [18]). In [33], we prove the lower semicontinuity in a more general framework in order to obtain the existence of solutions to a "continuous" version of the MMTP. The only issue is that a minimizing sequence $\{T^l\}_{l \in \mathbb{N}}$ for the MMTP does not necessarily have equibounded masses, hence it is not possible to apply Theorem 1.10 directly to obtain a minimizer. Nevertheless one can obtain a uniform bound on the masses "removing the cycles" from the T^l's. Namely, writing each $T^l = [\![\Sigma^l, \tau^l, \theta^l]\!]$ according to Theorem 1.9 as

$$T^l = \sum_{k=1}^{M(l)} (\tilde{T^l})^k + \sum_{h=1}^{\infty} (\mathring{T^l})^h,$$

and denoting $\tilde{T}^l = [\![\tilde{\Sigma}^l, \tau^l, \tilde{\theta}^l]\!] := \sum_{k=1}^{M(l)} (\tilde{T}^l)^k$, we get by (1.3) that for every $l \in \mathbb{N}$ it holds $\tilde{\theta}^l \preceq \tilde{\theta}^l$ $\mathscr{H}^1$-a.e. on Σ^l, hence, by the monotonicity of $\mathcal{C}$, we deduce that $\mathbb{E}(\tilde{T}^l) \leq \mathbb{E}(T^l)$. Observing that $\mathcal{B} = \partial T^l = \partial \tilde{T}^l$, we have that $\{\tilde{T}^l\}_{l\in\mathbb{N}}$ is also a minimizing sequence. Moreover, (1.2) implies that $\|\tilde{\theta}^l\|$ is bounded by a uniform constant M, $\mathscr{H}^1$-a.e. on $\tilde{\Sigma}^l$, and by properties (i) and (ii) of Definition 2.1 the cost of each nonzero element of $\mathbb{Z}^m$ is bounded from below by a value P. Hence the ratio $\|\tilde{\theta}^l\|/\mathcal{C}(\tilde{\theta}^l)$ is bounded by $C := \frac{M}{P}$ $\mathscr{H}^1$-a.e. on $\tilde{\Sigma}^l$. Integrating on $\tilde{\Sigma}^l$, we deduce that $\mathbb{M}(\tilde{T}^l) \leq C\mathbb{E}(\tilde{T}^l)$. This allows us to apply Theorem 1.10 and to find a subsequential limit, which is a solution to the MMTP. ∎

We remark here that, under the additional assumption (iii′) on the cost functional, the existence is also a trivial consequence Theorem 2.4 below.

The main result of the paper is the fact that, with the additional assumption (iii′) on the cost functional, the MMTP is equivalent to the superposition of a certain number of mass minimization problems among 1-dimensional integral currents, with coefficients in a group (which is larger than $\mathbb{Z}^m$). Introducing such problems requires some additional notation.

Let $\mathcal{B}$ be as in (2.3). For $i = 1, \dots, m$, let

$$N_i := \frac{1}{2}\sum_{\ell=1}^{M} |\eta_{\ell,i}| \quad \text{and let} \quad N := \sum_{i=1}^{m} N_i. \tag{2.4}$$

Note that, since $|\eta_{\ell,i}| \in \mathbb{N}\ \forall \ell, i$, then N_i are natural numbers for every i, and so is N. Since i represents an index for the m different types of materials, then N_i should be thought as the total amount of the production of the material corresponding to the index i among all factories. Similarly N represents the total amount of production of the union of all materials. We associate with $\mathcal{B}$ a rectifiable 0-current, with coefficients in $\mathbb{Z}^N$ with the following procedure. Heuristically, for every $i = 1, \dots, m$, we will give different labels to each of the N_i copies produced of the ith material, so that in total we will have N different labels. Note that this is in a certain sense an "unnatural" operation, since in the original problem different copies of the same material are indistinguishable. Let us explain first how we assign the labels. We begin by splitting the set $\{1, \dots, N\}$ into an ordered sequence made by the m groups $\{1, \dots, N_1\}$, $\{N_1 + 1, \dots, N_1 + N_2\}, \dots, \{N - N_m + 1, \dots, N\}$. We will use the ith group ($i = 1, \dots, m$) as the set of labels for the N_i copies produced of the ith material. Hence to every index $j \in \{1, \dots, N\}$ we associate the corresponding $i(j)$ which is describing to which of the m materials the label j corresponds. Formally, for every $j \in \{1, \dots, N\}$, we denote $i(j)$ the first index i such that $N_1 + \cdots + N_i \geq j$. Now we want to identify one of the points $\{p_\ell\}_{\ell=1}^M$ in which we will think that the copy of the $i(j)$th material, labeled with j, is produced. Therefore we let $\bar{j} := \sum_{k=0}^{i(j)-1} N_k$ (observe that $j - \bar{j}$ describes the position of the index j in the $i(j)$th group defined above) and moreover we let $\ell^-(j)$ be the first index ℓ such that

$$\sum_{\eta_{\ell,i(j)}<0} |\eta_{\ell,i(j)}| \geq j - \bar{j}.$$

Similarly, let $\ell^+(j)$ be the first index ℓ such that

$$\sum_{\eta_{\ell,i(j)}>0} \eta_{\ell,i(j)} \geq j - \bar{j}.$$

Finally we define

$$P(j) := p_{\ell^-(j)} \quad \text{and} \quad D(j) := p_{\ell^+(j)}.$$

Since it is too restrictive to assume that, for every $j = 1, \dots, N$, the $i(j)$th material produced in $P(j)$ will be sent to the point $D(j)$, we need to allow some "reshuffling". To this aim, we let $\sigma = (\sigma_1, \dots, \sigma_m) \in \mathcal{S}_{N_1} \times \cdots \times \mathcal{S}_{N_m}$, where $\mathcal{S}_q$ is the group of permutations on q elements. With a small abuse of notation, we write $\sigma(j)$ for the number $\bar{j} + \sigma_{i(j)}(j - \bar{j})$. Note that each σ_i $(i = 1, \dots, m)$ is thought as a permutation acting on the ith group defined above.

Last we define our rectifiable 0-current with coefficients in $\mathbb{Z}^N$ as

$$\mathcal{B}_\sigma := -\sum_{j=1}^{N} e_j \delta_{P_j} + \sum_{j=1}^{N} e_j \delta_{D_{\sigma(j)}}. \tag{2.5}$$

Observe that every fixed permutation prescribes in which of the M points the copy of each labeled material will be moved. Since in our transportation problem it is not natural to prescribe such assignments, we will let the permutation vary.

Now we can state our alternative formulation of the MMTP, which is simply a *mass-minimization problem* (MMP):

(MMP:) Let $\|\cdot\|$ be a norm on $\mathbb{R}^N$. Among all $\sigma \in \mathcal{S}_{N_1} \times \cdots \times \mathcal{S}_{N_m}$ and among all 1-dimensional integral $\mathbb{Z}^N$-currents $\bar{T} = [\![\bar{\Sigma}, \bar{\tau}, \bar{\theta}]\!]$ in $\mathbb{R}^d$ such that $\partial \bar{T} = \mathcal{B}_\sigma$ (defined in (2.5)), find one which minimizes the mass $\mathbb{M}(\bar{T})$, where the mass is computed with respect to the norm $\|\cdot\|$.

The main result of the paper is the following.

THEOREM 2.4 (equivalence between MMTP and MMP). *Let $\mathcal{B}$ be as in* (2.3) *and N as in* (2.4)*. Then, for every $\mathcal{C}$ as in Definition* 2.1*, satisfying* (i), (ii), (iii′)*, there exists a norm $\|\cdot\|$ on $\mathbb{R}^N$ such that the problems MMTP and MMP are equivalent. Namely, the minima are the same and moreover there is a canonical way to construct a solution of the MMTP from a solution of the MMP and vice versa.*

Remark 2.5 (irrigation-type problems). A corollary of the proof of Theorem 2.4 is the following. If there exists one index $\bar{\ell} \in \{1, \dots, M\}$ such that $|\eta_{\bar{\ell},i}| = \sum_{\ell \neq \bar{\ell}} |\eta_{\ell,i}|$ for every $i = 1, \dots, m$, then in the MMP it is not necessary to minimize among the permutations σ (i.e., the minimum is the same for every permutation). In the single-material case, the assumption corresponds to the case called the "irrigation problem," where the initial (or the target) measure is a Dirac delta.

Remark 2.6 (MMP as a Lagrangian formulation of the MMTP). Recalling the interpretation of the coordinates of $\mathbb{R}^N$ as labels for different copies of the m materials, we can view the MMP as a version of the MMTP where one can trace the trajectory of every particle of each type of material. The equivalence between Eulerian formulations (describing the flow of particles at every point) and Lagrangian formulations (describing the particles' trajectories) of branched transportation problems is an interesting problem in general (see, e.g., [9]) which is based on a profound result of Smirnov on the structure of classical normal 1-currents (see [39]). For our discrete problem, instead, the equivalence is a simple consequence of Theorem 1.9. For the sake of brevity, we will not pursue this in the present paper.

3. Equivalence between MMTP and MMP. The aim of this section is to establish the equivalence between the MMTP and the MMP of section 2. This follows

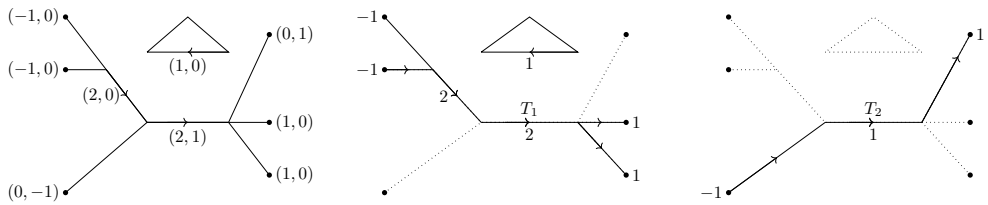

FIG. 1. *On the left a* 1*-dimensional integral* $\mathbb{Z}^2$*-current* $T = (T_1, T_2)$ *and on the right its two components.*

from Theorem 1.9, once we find a norm $\|\cdot\|$ on $\mathbb{R}^N$ which is monotone and satisfies, for every $\sigma \in \mathcal{S}_{N_1} \times \cdots \times \mathcal{S}_{N_m}$,

(3.1)
$$\begin{aligned}&\mathcal{C}(\theta_1, \dots, \theta_m)\\ &= \Big\| \operatorname{sign}(\theta_1) \sum_{j=1}^{|\theta_1|} e_{\sigma(j)} + \operatorname{sign}(\theta_2) \sum_{j=N_1+1}^{N_1+|\theta_2|} e_{\sigma(j)} + \cdots + \operatorname{sign}(\theta_m) \sum_{j=N-N_m+1}^{N-N_m+|\theta_m|} e_{\sigma(j)} \Big\|,\end{aligned}$$

where N and N_i $(i = 1, \dots, m)$ are defined in (2.4). The existence of such a norm would imply that the *cost* of the transportation of a vector of materials $(\theta_1, \dots, \theta_n)$ along a stretch of the network corresponds to the *mass* of the current with coefficients in $\mathbb{R}^N$ that we will associate with that stretch of the network.

The existence of such a norm is proved in Theorem 3.2. First we show how to prove Theorem 2.4 using the existence of $\|\cdot\|$.

Proof. Fix $\mathcal{B}$ as in (2.3). We divide the proof into two steps.

Step 1: *from MMTP to MMP.* Let $T := [\![\Sigma, \tau, \theta]\!]$ be a 1-dimensional integral $\mathbb{Z}^m$-current which is a competitor for the MMTP. The aim of this step is to construct from T a competitor $\bar{T}$ for the MMP "associated" with $\mathcal{B}$, such that $\mathbb{M}(\bar{T}) \le \mathbb{E}(T)$.

Consider the components of T (see Figure 1)

$$T_1 := [\![\Sigma, \tau, \theta_1]\!], \dots, T_m := [\![\Sigma, \tau, \theta_m]\!].$$

By [25, 4.2.25] we can write, for $i = 1, \dots, m$

$$T_i = \sum_{k=1}^{N_i} \tilde{T}_i^k + \sum_{h=1}^{\infty} \mathring{T}_i^h \tag{3.2}$$

with[1]

$$\mathbb{M}(T_i) = \sum_{k=1}^{N_i} \mathbb{M}(\tilde{T}_i^k) + \sum_{h=1}^{\infty} \mathbb{M}(\mathring{T}_i^h) \quad \text{and} \quad \mathbb{M}(\partial T_i) = \textstyle\sum_{k=1}^{N_i} \mathbb{M}(\partial \tilde{T}_i^k), \tag{3.3}$$

where:

- $\tilde{T}_i^k := [\![\Gamma_i^k, \tau_i^k, 1]\!]$ are integral 1-currents associated with simple, Lipschitz, open curves $\gamma_i^k : [0,1] \to \mathbb{R}^d$, where $\Gamma_i^k := \operatorname{Im}(\gamma_i^k)$ and $\tau_i^k := \frac{(\gamma_i^k)'}{|(\gamma_i^k)'|}$;

[1] Observe that all the currents in (3.3) are classical currents, therefore, the notion of mass is the standard one.

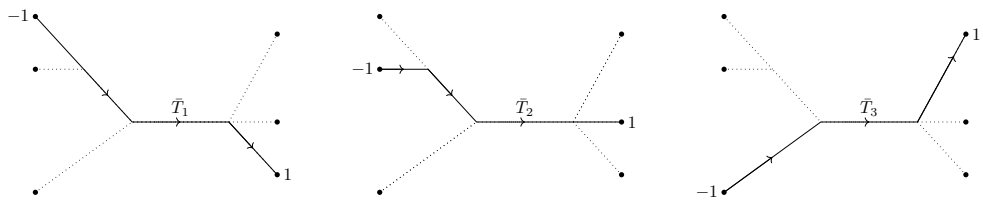

FIG. 2. *The components $\bar{T}_1, \bar{T}_2$, and $\bar{T}_3$ of the integral $\mathbb{Z}^3$-current $\bar{T}$.*

- $\mathring{T}_i^h := [\![Z_i^h, \nu_i^h, 1]\!]$ are integral 1-currents associated with simple, Lipschitz, closed curves (cycles) $\zeta_i^h : [0,1] \to \mathbb{R}^d$, where $Z_i^h := \mathrm{Im}(\zeta_i^h)$ and $\nu_i^h := \frac{(\zeta_i^h)'}{|(\zeta_i^h)'|}$.

For every $i = 1, \dots, m$, denote by $\Sigma_i := \cup_{k=1}^{N_i} \Gamma_i^k$ and by T' the 1-current

$$T_i' := \sum_{k=1}^{N_i} \tilde{T}_i^k.$$

Since each T_i' is supported on Σ, we can write $T_i' := [\![\Sigma, \tau, \theta_i']\!]$. Let T' be the 1-dimensional integral $\mathbb{Z}^m$-current whose components are $(T_1', \dots, T_m')$.

It follows from (3.2) that for every $i = 1, \dots, m$ and for $\mathscr{H}^1$-a.e. $x \in \Sigma$ it holds

$$\theta_i(x) = \sum_{k=1}^{N_i} \chi_{\Gamma_i^k}(x) \langle \tau_i^k(x); \tau(x) \rangle + \sum_{h=1}^{\infty} \chi_{Z_i^h}(x) \langle \nu_i^h(x); \tau(x) \rangle, \tag{3.4}$$

where we denoted by χ_E the characteristic function of the set E taking values 0 and 1. Combining (3.4) and (3.3) we deduce that for every $i = 1, \dots, m$ it holds

$$\tau_i^k(x) = \mathrm{sign}(\theta_i(x))\tau(x) \quad \text{for } \mathscr{H}^1\text{-a.e. } x \in \Gamma_i^k \text{ for every } k$$

and

$$\nu_i^h(x) = \mathrm{sign}(\theta_i(x))\tau(x) \quad \text{for } \mathscr{H}^1\text{-a.e. } x \in Z_i^h \text{ for every } h.$$

Hence it holds $(\theta_1'(x), \dots, \theta_m'(x)) \preceq (\theta_1(x), \dots, \theta_m(x))$ for $\mathscr{H}^1$-a.e. $x \in \Sigma$, which yields $\mathbb{E}(T') \le \mathbb{E}(T)$ by property (ii) of Definition 2.1. Moreover by (3.2) it holds $\partial T' = \partial T$.

Next we associate with T' a 1-dimensional integral $\mathbb{Z}^N$-current $\bar{T}$, simply defining $\bar{T}$ to be the current with components $(\bar{T}_1, \dots, \bar{T}_N)$, where we set, for $j = 1, \dots, N$ (recalling the definition of $i(j)$ and $\bar{j}$ from section 2), $\bar{T}_j := \tilde{T}_{i(j)}^k$ for $k = j - \bar{j}$.

Applying the boundary operator to (3.2), it follows that $\bar{T}$ is a competitor for the MMP. Moreover by (3.4) and (3.1) it follows that $\mathbb{M}(\bar{T}) = \mathbb{E}(T') \le \mathbb{E}(T)$.

Step 2: *from MMP to MMTP.* Let $\sigma \in \mathcal{S}_{N_1} \times \cdots \times \mathcal{S}_{N_m}$. Let $\bar{T} := [\![\bar{\Sigma}, \bar{\tau}, \bar{\theta}]\!]$ be a 1-dimensional integral $\mathbb{Z}^N$-current which is a competitor for the MMP and in particular $\partial \bar{T} = \mathcal{B}_\sigma$ (defined in (2.5)). The aim of this step is to construct from $\bar{T}$ a competitor T for the MMTP associated with $\mathcal{B}$, such that $\mathbb{E}(T) \le \mathbb{M}(\bar{T})$.

Let

$$\bar{T}_1 := [\![\bar{\Sigma}, \bar{\tau}, \bar{\theta}_1]\!], \dots, \bar{T}_N := [\![\bar{\Sigma}, \bar{\tau}, \bar{\theta}_N]\!]$$

be the components of $\bar{T}$ (see Figure 2).

As in the previous step, by [25, 4.2.25] and using the fact that $\mathbb{M}(\partial \bar{T}_j) = 2$, we can write for $j = 1, \dots, N$

$$\bar{T}_j = \tilde{T}_j + \sum_{h=1}^{\infty} \mathring{T}_j^h \tag{3.5}$$

with

$$\mathbb{M}(\bar{T}_j) = \mathbb{M}(\tilde{T}_j) + \sum_{h=1}^{\infty} \mathbb{M}(\mathring{T}_j^h), \tag{3.6}$$

where

- $\tilde{T}_j := [\![\Gamma_j, \tau_j, 1]\!]$ are integral 1-currents associated with simple, Lipschitz, open curves $\gamma_j : [0,1] \to \mathbb{R}^d$, where $\Gamma_j := \mathrm{Im}(\gamma_j)$ and $\tau_j := \frac{(\gamma_j)'}{|(\gamma_j)'|}$;
- $\mathring{T}_j^h := [\![Z_j^h, \nu_j^h, 1]\!]$ are integral 1-currents associated with simple Lipschitz closed curves $\zeta_j^h : [0,1] \to \mathbb{R}^d$ with $\zeta(0) = \zeta(1)$, where $Z_j^h := \mathrm{Im}(\zeta_j^h)$ and $\nu_j^h := \frac{(\zeta_j^h)'}{|(\zeta_j^h)'|}$.

Let T' be the 1-dimensional integral $\mathbb{Z}^N$-current whose components are $(\tilde{T}_1, \dots, \tilde{T}_N)$. By (3.5) and (3.6), for $j = 1, \dots, N$ it holds $\langle \bar{\tau}; \tilde{\tau}_j \rangle = \mathrm{sign}(\bar{\theta}_j)$ $\mathscr{H}^1$-a.e. in $\tilde{\Gamma}_j$ and, hence, since $\|\cdot\|$ is a monotone norm, we have $\mathbb{M}(T') \le \mathbb{M}(\bar{T})$. Moreover, by (3.5) it holds $\partial T' = \partial \bar{T}$.

Let T be the 1-dimensional integral $\mathbb{Z}^m$-current with components (recalling the definition of $i(j)$ from section 2)

$$T_i := \sum_{j : i(j) = i} \tilde{T}_j.$$

Since $\partial T' = \mathcal{B}_\sigma$, then $\partial T = \mathcal{B}$. Moreover by (3.1) it holds $\mathbb{E}(T) = \mathbb{M}(T') \le \mathbb{M}(\bar{T})$. ∎

We conclude this section by proving the existence of a monotone norm $\|\cdot\|$ satisfying (3.1).

In the proof of the next theorem, we will use the following fact, which can be found in [1]. Recall the notions of monotone and absolute norm given at the beginning of section 2, as well as the partial order introduced there.

LEMMA 3.1. *An absolute norm on $\mathbb{R}^n$ is monotone.*

We will use the term *orthant* in $\mathbb{R}^n$ for the following subset of $\mathbb{R}^n$. Consider a vector $\xi \in \mathbb{R}^d$ whose coordinates are only ± 1. The ξ-orthant is:

$$\{x \in \mathbb{R}^d : \xi_\ell x_\ell \ge 0 \quad \forall \ell = 1, \dots, n\}.$$

Note that an orthant is always closed.

THEOREM 3.2 (existence of a norm satisfying (3.1)). *Let $\mathcal{C} : \mathbb{Z}^m \to [0, +\infty)$ be a function satisfying* (i), (ii), (iii′) *of Definition* 2.1. *Let $\mathcal{B}$ be as in* (2.3) *and let N and N_i $(i = 1, \dots, m)$ be the natural numbers defined in* (2.4). *Then there exists a monotone norm $\|\cdot\|$ on $\mathbb{R}^N$ satisfying* (3.1).

Proof. Step 1: First of all, let us suppose that $\mathcal{C}$ has the additional property that

$$\mathcal{C}(x) = \mathcal{C}(\bar{x}) \tag{3.7}$$

for every $x \in \mathbb{Z}^m$, where we used the notation introduced at the beginning of section 2.

General strategy. Let us denote by $\mathcal{A}$ the set of elements of $\mathbb{Z}^N$ whose coordinates are only 0's and 1's, and denote $\bar{\mathcal{A}} := \{x \in \mathbb{Z}^N : \bar{x} \in \mathcal{A}\}$.

Let $A = (a_1, \dots, a_N)$, $B = (b_1, \dots, b_N) \in \mathcal{A}$. We say that the pair $(A, B) \in \mathcal{A} \times \mathcal{A}$ is *good* if $A - B \ne 0$ and the following implications hold for every $i = 1, \dots, m$ (again, we set $N_0 := 0$):

- if $a_j = 1$ for some j between $N_1 + \cdots + N_{i-1} + 1$ and $N_1 + \cdots + N_i$ then $b_h = 0$ for all indices h in the same range;
- if $b_j = 1$ for some j between $N_1 + \cdots + N_{i-1} + 1$ and $N_1 + \cdots + N_i$ then $a_h = 0$ for all indices h in the same range.

Recalling the heuristic interpretation described in section 2, any vector of $\mathbb{R}^N$ whose coordinates are only $-1, 1$, or 0, represents a collection of labeled materials, possibly of different types. If (A, B) is a good pair, then on each of the m groups into which we split the set of labels $\{1, \dots, N\}$ at most one among A and B can have some nonzero coordinates. Therefore in the corresponding vector $A - B$, all the coordinates in each group belong either to $\{0, 1\}$ or to $\{0, -1\}$. This represents the fact that all the materials of the same type are assumed to travel with the same orientation.

If (A, B) is a good pair we define

$$c_{A,B} := \mathcal{C}\left(\sum_{j=1}^{N_1}(a_j - b_j), \dots, \sum_{j=N-N_{m-1}+1}^{N}(a_j - b_j)\right). \tag{3.8}$$

This represents the cost of transporting the collection of goods labeled by $A - B$ along a stretch of unit length. Observing that, if $A - B \neq 0$ we have $c_{A,B} \neq 0$, we can define

$$q_{A,B} := \frac{A - B}{c_{A,B}}$$

for any good pair (A, B). Observe that if (A, B) and (A', B') are good pairs with $\overline{A - B} = \overline{A' - B'}$, then by (3.7) it holds $c_{A,B} = c_{A',B'}$. Hence given $D \neq 0$ any vector in $\bar{\mathcal{A}}$, it is convenient to define $c_D := c_{\bar{D},0}$, which is well defined since $(\bar{D}, 0)$ is a good pair. As above, we define $q_D := \frac{D}{c_D}$. Consider the convex hull

$$C := \mathrm{co}(\{q_D : D \in \bar{\mathcal{A}} \setminus \{0\}\}) \subset \mathbb{R}^N.$$

The theorem is proven if we show three properties of C:

(1) C is a convex body (i.e., the closure of its nonempty interior) which is bounded and symmetric with respect to the origin;
(2) C is a monotone set, i.e., for every $x, y \in \mathbb{R}^N$ with $y \preceq x$, if $x \in C$, then also $y \in C$.
(3) it holds

$$q_{A,B} \in \partial C \quad \forall A, B \in \mathcal{A}, \quad \text{such that } (A, B) \text{ is a good pair.}$$

Indeed, if (1) holds, there exists a norm $\|\cdot\|$ on $\mathbb{R}^N$ whose unit ball is the set C. Then, (2) implies that $\|\cdot\|$ is monotone. Moreover (3) implies that $\|\cdot\|$ satisfies (3.1). Indeed, take an m-tuple $(\theta_1, \dots, \theta_m)$ and denote, for every $i = 1, \dots, m$, $\theta_i^+ := \max\{\operatorname{sign}\theta_i, 0\}$, $\theta_i^- := \max\{-\operatorname{sign}\theta_i, 0\}$. Now define for every $\sigma \in \mathcal{S}_{N_1} \times \cdots \times \mathcal{S}_{N_m}$,

$$A_\sigma := \theta_1^+ \sum_{j=1}^{|\theta_1|} e_{\sigma(j)} + \theta_2^+ \sum_{j=N_1+1}^{N_1+|\theta_2|} e_{\sigma(j)} + \cdots + \theta_m^+ \sum_{j=N-N_m+1}^{N-N_m+|\theta_m|} e_{\sigma(j)}$$

and

$$B_\sigma := \theta_1^- \sum_{j=1}^{|\theta_1|} e_{\sigma(j)} + \theta_2^- \sum_{j=N_1+1}^{N_1+|\theta_2|} e_{\sigma(j)} + \cdots + \theta_m^- \sum_{j=N-N_m+1}^{N-N_m+|\theta_m|} e_{\sigma(j)}.$$

One can verify that $A_\sigma, B_\sigma \in \mathcal{A}$ and (A_σ, B_σ) is a good pair. Hence we have

$$1 \overset{(3)}{=} \|q_{A_\sigma,B_\sigma}\| = \frac{\|A_\sigma - B_\sigma\|}{c_{A_\sigma,B_\sigma}} \overset{(3.8)}{=} \frac{\|A_\sigma - B_\sigma\|}{\mathcal{C}(\theta_1,\dots,\theta_m)}.$$

We conclude noting that $A_\sigma - B_\sigma$ coincides with the right-hand side (RHS) of (3.1).

Proof of (1) *and* (2). To prove (1), notice that for every $j = 1,\dots,N$, $q_{\pm e_j}$ are contained in C, hence $0 \in \operatorname{int}(C)$. The fact that C is symmetric with respect to the origin follows from the fact that the multimaterial cost $\mathcal{C}$ is even. Finally, the boundedness is trivial, since C is the convex hull of a finite set.

We will now prove (2), i.e., that C is a monotone set. To prove it, we show that the norm with unit ball C is absolute. This implies the monotonicity by Lemma 3.1. Let $x \in \mathbb{R}^N$ with $\|x\| = 1$. The fact that $\|x\| = 1$ implies that $x \in \partial C \subset C$, therefore, we can write

$$x = \sum_{k=1}^{K} t_k q_{D^k},$$

where $D^k \in \bar{\mathcal{A}} \setminus \{0\}$, $\sum_{k=1}^{K} t_k = 1$ with t_k positive. There exists a diagonal matrix $M \in \mathrm{Mat}^{N\times N}$ with entries $1, -1, 0$ such that $Mx = \bar{x}$. Therefore,

$$\|\bar{x}\| = \|Mx\| = \left\|\sum_{k=1}^{K} t_k M q_{D^k}\right\| = \left\|\sum_{k=1}^{K} t_k q_{MD^k}\right\| \le \sum_{k=1}^{K} t_k \|q_{MD^k}\| \le \sum_{k=1}^{K} t_k \le 1,$$

where the third equality follows from the fact that $c_{D^k} = c_{MD^k}$ (the latter being a consequence of the fact that $\overline{MD} = \overline{D}$ for every $D \in \bar{\mathcal{A}} \setminus \{0\}$) and the second inequality follows from the fact that $\|q_D\| \le 1$ $\forall D \in \bar{\mathcal{A}}$, by the definition of C. This proves that

$$\|\bar{x}\| \le \|x\| \quad \forall x \in \mathbb{R}^N.$$

The proof of the reverse inequality is analogous.

Proof of (3). The proof of (3) is more involved. We can prove equivalently that for every $A, B \in \mathcal{A}$, such that (A, B) is a good pair, and for every $t > 0$ the following implication holds:

$$tq_{A,B} \in C \Longrightarrow t \le 1. \tag{3.9}$$

Since $tq_{A,B} \in C$, we can write

$$tq_{A,B} = \sum_{k=1}^{K} \lambda_k q_{D^k}, \tag{3.10}$$

where $D^k \in \bar{\mathcal{A}}$, $\sum_{k=1}^{K} \lambda_k = 1$, with λ_k positive. Formula (3.10) can be rewritten componentwise, denoting $D^k = (d_1^k, \dots, d_N^k)$,

$$t\frac{a_j - b_j}{c_{A,B}} = \sum_k \lambda_k \frac{d_j^k}{c_{D^k}} \text{ for every } j = 1,\dots,N.$$

For $k = 1,\dots,K$, we define vectors $F^k := (f_1^k, \dots, f_N^k) \in \bar{\mathcal{A}}$ by

$$\begin{cases} f_j^k := 0 \text{ if } a_j - b_j = 0, \\ f_j^k := d_j^k \text{ otherwise.} \end{cases} \tag{3.11}$$

Note that

$$t\frac{a_j - b_j}{c_{A,B}} = \sum_k \lambda_k \frac{f_j^k}{c_{D^k}} \text{ for every } j = 1, \dots, N. \tag{3.12}$$

Indeed, the equality

$$\sum_k \lambda_k \frac{d_j^k}{c_{D^k}} = \sum_k \lambda_k \frac{f_j^k}{c_{D^k}}$$

holds for those j such that $\sum_k \lambda_k \frac{d_j^k}{c_{D^k}} \neq 0$ because in that case $f_j^k = d_j^k$ for every k. On the other hand, for those indices j for which $\sum_k \lambda_k \frac{d_j^k}{c_{D^k}} = 0$ by the definition of F^k, also $f_j^k = 0$ for every k, so that

$$\sum_k \lambda_k \frac{f_j^k}{c_{D^k}} = 0 = \sum_k \lambda_k \frac{d_j^k}{c_{D^k}}.$$

Moreover

$$c_{F^k} \leq c_{D^k} \tag{3.13}$$

by property (ii) in Definition 2.1 (because $\bar{F}^k \preceq \bar{D}^k$ by the definition of F^k). Denote, for $i = 1, \dots, m$,

$$x_i := \sum_{j=N_1+\cdots+N_{i-1}+1}^{N_1+\cdots+N_i} a_j - b_j,$$

and for $k = 1, \dots, K$,

$$x_i^k := \sum_{j=N_1+\cdots+N_{i-1}+1}^{N_1+\cdots+N_i} e_j^k.$$

Define, for every $k = 1, \dots, K$ and for every $i = 1, \dots, m$,

$$y_i^k := \begin{cases} x_i^k \text{ if } x_i^k x_i \geq 0, \\ -x_i^k \text{ if } x_i^k x_i \leq 0. \end{cases}$$

Finally, denote $x := (x_1, \dots, x_m)$, and $y^k := (y_1^k, \dots, y_m^k)$, for $k = 1, \dots, K$. By (3.11), we have that $y^k \preceq x$ for every k. To see this, note that, by the definition of y^k, it immediately follows that $y_i^k x_i \geq 0$. To prove that $|y_i^k| \leq |x_i|$ for every i and k, we recall the fact that (A, B) is a good pair, so that, in particular, we have the following property:

$$\sum_{j=N_1+\cdots+N_{i-1}+1}^{N_1+\cdots+N_i} |a_j - b_j| = \left| \sum_{j=N_1+\cdots+N_{i-1}+1}^{N_1+\cdots+N_i} a_j - b_j \right| \ \forall i. \tag{3.14}$$

Also, since $|a_j - b_j| \in \{0, 1\}$ for every j, by the definition of f_j^k, it readily follows that

$$|f_j^k| \leq |a_j - b_j| \ \forall j, k. \tag{3.15}$$

We also have

$$\begin{aligned} |y_i^k| &= |x_i^k| \le \sum_{j=N_1+\cdots+N_{i-1}+1}^{N_1+\cdots+N_i} |f_j^k| \overset{(3.15)}{\le} \sum_{j=N_1+\cdots+N_{i-1}+1}^{N_1+\cdots+N_i} |a_j - b_j| \\ &\overset{(3.14)}{=} \left| \sum_{j=N_1+\cdots+N_{i-1}+1}^{N_1+\cdots+N_i} a_j - b_j \right| = |x_i|. \end{aligned}$$

Moreover, by (3.12), for every $i = 1, \ldots, m$ it holds

$$\frac{t x_i}{c_{A,B}} = \sum_k \lambda_k \frac{x_i^k}{c_{D^k}},$$

hence the fact that $\operatorname{sign}(y_i^k) = \operatorname{sign}(x_i)$ implies

$$\begin{aligned} \frac{t|x_i|}{c_{A,B}} &= \frac{t \operatorname{sign}(x_i) x_i}{c_{A,B}} = \sum_k \lambda_k \frac{\operatorname{sign}(x_i) x_i^k}{c_{D^k}} = \sum_k \lambda_k \frac{\operatorname{sign}(x_i)\operatorname{sign}(x_i^k)|x_i^k|}{c_{D^k}} \\ &= \sum_k \lambda_k \frac{\operatorname{sign}(x_i x_i^k)|y_i^k|}{c_{D^k}} = \sum_k \lambda_k \frac{\operatorname{sign}(x_i^k) y_i^k}{c_{D^k}}. \end{aligned}$$

From the equality $\operatorname{sign}(y_i^k) = \operatorname{sign}(x_i)$, holding for every k, i, we also deduce that, if we fix i, the quantity $\operatorname{sign}(y_i^k)$ remains constant when varying k. Now, if y_i^k is positive, for every k, since $\operatorname{sign}(x_i^k) \le 1$, we get

$$\frac{t|x_i|}{c_{A,B}} \le \sum_k \lambda_k \frac{y_i^k}{c_{D^k}} = \left| \sum_k \lambda_k \frac{y_i^k}{c_{D^k}} \right|.$$

Otherwise, using the fact that $\operatorname{sign}(x_i^k) \ge -1$,

$$\frac{t|x_i|}{c_{A,B}} \le \sum_k \lambda_k \frac{-y_i^k}{c_{D^k}} = \left| \sum_k \lambda_k \frac{y_i^k}{c_{D^k}} \right|.$$

We have just proved that

$$t \frac{x}{c_{A,B}} \preceq \sum_{k: F^k \neq 0} \lambda_k \frac{y^k}{c_{D^k}}. \tag{3.16}$$

Finally, note also that $\bar{y}^k = \bar{x}^k$. By (3.7) it holds $c_{A,B} = \mathcal{C}(x)$ and $c_{F^k} = c_{\bar{F}^k} = \mathcal{C}(x^k) = \mathcal{C}(y^k)$; this implies, by property (iii′) of Definition 2.1 that

$$\frac{c_{A,B}\|y^k\|_\star}{c_{F^k}\|x\|_\star} = \frac{\mathcal{C}(x)\|y^k\|_\star}{\mathcal{C}(y^k)\|x\|_\star} \le 1 \quad \forall k = 1, \ldots, K \text{ such that } F^k \neq 0, \tag{3.17}$$

where $\|\cdot\|_\star$ is the norm appearing in such definition. Using that $\|\cdot\|_\star$ is monotone, (3.13), and (3.16), we get

$$\begin{aligned} t\|x\|_\star &\le \left\| \sum_{k: F^k \neq 0} \lambda_k \frac{c_{A,B} y^k}{c_{D^k}} \right\|_\star \le \sum_{k: F^k \neq 0} \left\| \lambda_k \frac{c_{A,B} y^k}{c_{D^k}} \right\|_\star \\ &= \sum_{k: F^k \neq 0} \lambda_k \frac{c_{A,B}\|y^k\|_\star}{c_{D^k}} \le \sum_{k: F^k \neq 0} \lambda_k \frac{c_{A,B}\|y^k\|_\star}{c_{F^k}}. \end{aligned}$$

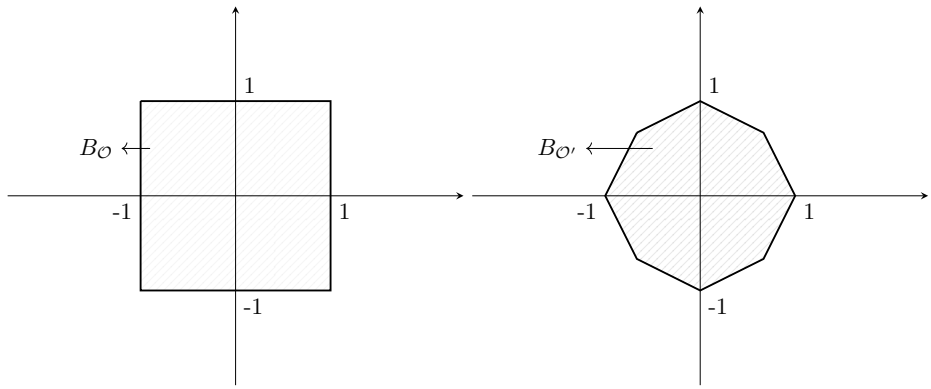

FIG. 3. *The unit balls relative to the norm associated with two costs $\mathcal{C}_{\mathcal{O}}$ and $\mathcal{C}_{\mathcal{O}'}$. Here $\mathcal{O}$ is the positive orthant and $\mathcal{O}'$ is its symmetric with respect to the y-axis.*

Finally, dividing by $\|x\|_\star$, (3.17) yields

$$t \leq \sum_{k:F^k \neq 0} \lambda_k \leq 1.$$

Step 2: Now consider a general cost $\mathcal{C}$, which does not necessarily satisfy (3.7). We will construct a closed, convex, and symmetric set C, whose associated norm is monotone and satisfies (3.1).

General strategy. For any orthant $\mathcal{O} \subset \mathbb{R}^m$, we define a cost $\mathcal{C}_{\mathcal{O}} : \mathbb{Z}^m \to [0, +\infty)$, imposing the following properties:

(a) $\mathcal{C}_{\mathcal{O}}(x) = \mathcal{C}(x)$ if $x \in \mathcal{O}$;

(b) $\mathcal{C}_{\mathcal{O}}(x) = \mathcal{C}_{\mathcal{O}}(\bar{x})$ for every x.

Trivially, properties (i), (ii), (iii′) of Definition 2.1 are satisfied by $C_{\mathcal{O}}$.

Let $\|\cdot\|_{\mathcal{O}}$ be the norm on $\mathbb{R}^N$ obtained applying Step 1 to the cost $\mathcal{C}_{\mathcal{O}}$ and let $B_{\mathcal{O}}$ be the unit ball with respect to such norm (see Figure 3). Let us take any point $x \in \mathrm{int}(\mathcal{O})$ and define

$$\sigma_{\mathcal{O}} := (\mathrm{sign}(x_1), \ldots, \mathrm{sign}(x_m)) \in \mathbb{R}^m.$$

Let us also denote

$$\tau_{\mathcal{O}} := \mathrm{sign}(x_1)(e_1 + \cdots + e_{N_1}) + \cdots + \mathrm{sign}(x_m)(e_{N-N_m+1} + \cdots + e_N) \in \mathbb{R}^N,$$

and let $H_{\mathcal{O}}$ be the unique orthant in $\mathbb{R}^N$ containing the point $\tau_{\mathcal{O}}$. Finally, consider $A_{\mathcal{O}} := H_{\mathcal{O}} \cap B_{\mathcal{O}}$ and (see Figures 4 and 5)

$$C_{\mathcal{O}} := \{p \in \mathbb{R}^N : \exists q \in A_{\mathcal{O}} \text{ with } (\tau_{\mathcal{O}})_j (p_j - q_j) \leq 0 \text{ for every } j = 1, \ldots, N\}.$$

Observe that

$$C_{\mathcal{O}} \cap H_{\mathcal{O}} = A_{\mathcal{O}}, \tag{3.18}$$

by the monotonicity of $A_{\mathcal{O}}$, which is implied by the monotonicity of $B_{\mathcal{O}}$ (the inter-

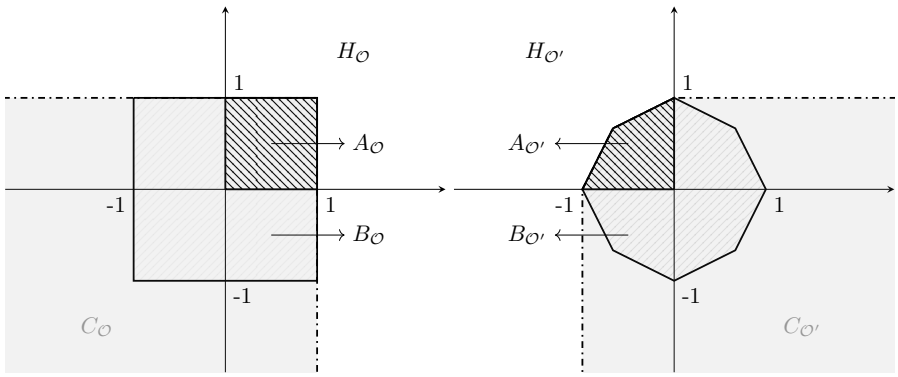

FIG. 4. *The construction of the sets $C_{\mathcal{O}}$ and $C_{\mathcal{O}'}$.*

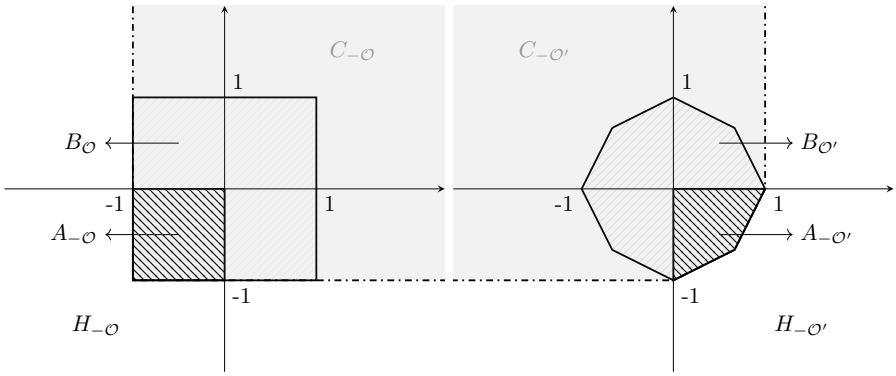

FIG. 5. *The construction of the sets $C_{-\mathcal{O}}$ and $C_{-\mathcal{O}'}$.*

section of monotone sets is monotone). Last we denote

$$C := \bigcap_{\mathcal{O}\subset\mathbb{R}^m} C_{\mathcal{O}},$$

where the intersection is taken among the 2^m orthants in $\mathbb{R}^m$ (see Figure 6).

We claim that C is a closed, convex, and monotone set, with nonempty interior, which is symmetric with respect to the origin, bounded, and satisfies

$$C \cap H_{\mathcal{O}} = A_{\mathcal{O}} \quad \text{for every orthant } \mathcal{O} \subset \mathbb{R}^m. \tag{3.19}$$

The monotonicity of C would imply that the norm $\|\cdot\|$ on $\mathbb{R}^N$, whose unit ball is C, is monotone. Moreover, Step 1 implies that (3.1) holds for the norm $\|\cdot\|_{\mathcal{O}}$ and the cost $\mathcal{C}_{\mathcal{O}}$. We also observe that, in the orthant $\mathcal{O}$ of $\mathbb{R}^m$, the costs $\mathcal{C}$ and $\mathcal{C}_{\mathcal{O}}$ coincide. Also, (3.19) implies that, in the orthant $H_{\mathcal{O}}$ of $\mathbb{R}^N$, $\|\cdot\|$ and $\|\cdot\|_{\mathcal{O}}$ coincide. In this way, we get that (3.1) holds also for $\|\cdot\|$ and for the cost $\mathcal{C}$.

The fact that C is closed, convex, and monotone follows from the fact that each set $C_{\mathcal{O}}$ is so, moreover, each $C_{\mathcal{O}}$ contains a neighborhood of the origin, hence C has nonempty interior. The fact that C is bounded and symmetric with respect to the origin follows from the fact that $C_{\mathcal{O}} \cap C_{-\mathcal{O}}$ is so for every $\mathcal{O}$, where we denoted by $-\mathcal{O}$ the orthant which is symmetric to $\mathcal{O}$ with respect to the origin. To conclude, we have to prove (3.19). To prove (3.19), we make the following claim.

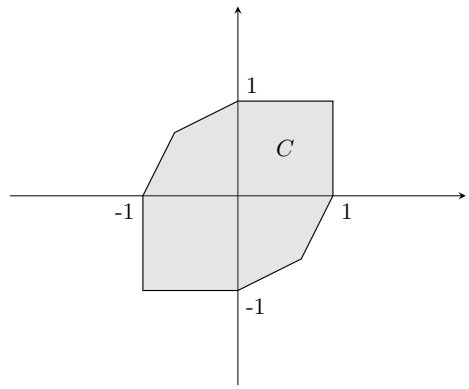

FIG. 6. *The construction of the set C.*

Claim 1. $A_{\mathcal{O}'} \cap H_{\mathcal{O}} = A_{\mathcal{O}} \cap H'_{\mathcal{O}}$ for every pair of orthants $\mathcal{O}, \mathcal{O}' \subset \mathbb{R}^m$.

Proof of (3.19) *using Claim* 1. Let us show first how Claim 1 implies (3.19). By the definition of C, it is sufficient to show that

$$C_{\mathcal{O}'} \cap A_{\mathcal{O}} = A_{\mathcal{O}} \quad \text{for every pair of orthants } \mathcal{O}, \mathcal{O}' \subset \mathbb{R}^m; \tag{3.20}$$

indeed

$$C \cap H_{\mathcal{O}} = \bigcap_{\mathcal{O}' \subset \mathbb{R}^m} C_{\mathcal{O}'} \cap H_{\mathcal{O}} = \bigcap_{\mathcal{O}' \subset \mathbb{R}^m} C_{\mathcal{O}'} \cap C_{\mathcal{O}} \cap H_{\mathcal{O}} \overset{(3.18)}{=} \bigcap_{\mathcal{O}' \subset \mathbb{R}^m} C_{\mathcal{O}'} \cap A_{\mathcal{O}} \overset{(3.20)}{=} A_{\mathcal{O}}.$$

To prove (3.20) using Claim 1, we write

$$C_{\mathcal{O}'} \cap A_{\mathcal{O}} = \bigcup_{H} (C_{\mathcal{O}'} \cap H \cap A_{\mathcal{O}}),$$

where H varies among the 2^N orthants of $\mathbb{R}^N$. Then (3.20) would follow from

$$C_{\mathcal{O}'} \supseteq H \cap A_{\mathcal{O}} \quad \forall \mathcal{O}, \mathcal{O}', H. \tag{3.21}$$

To prove (3.21), consider $z \in H \cap A_{\mathcal{O}}$. We define a new vector, $y \in \mathbb{R}^N$, in this way:

$$y_j = \begin{cases} z_j \text{ if } (\tau_{\mathcal{O}'})_j z_j \geq 0, \\ 0 \text{ otherwise.} \end{cases}$$

It is immediate to see that $(\tau_{\mathcal{O}'})_j (z_j - y_j) \leq 0 \ \forall j$, and that $y \in H_{\mathcal{O}'}$. Hence, to prove that $z \in C_{\mathcal{O}'}$ it is sufficient to prove that $y \in A_{\mathcal{O}'}$. We observe that $y \in A_{\mathcal{O}}$, because $y \preceq z$ and $z \in A_{\mathcal{O}}$. By Claim 1, this yields

$$y \in A_{\mathcal{O}} \cap H_{\mathcal{O}'} = A_{\mathcal{O}'} \cap H_{\mathcal{O}}.$$

Therefore $y \in A_{\mathcal{O}'}$ as desired.

Proof of Claim 1: *strategy.* To prove Claim 1, we will prove the more precise formula

$$A_{\mathcal{O}'} \cap H_{\mathcal{O}} = \mathrm{co}(\{0\} \cup \{q_D : D \in (\bar{\mathcal{A}} \cap H_{\mathcal{O}} \cap H_{\mathcal{O}'} \setminus \{0\})\}) \quad \forall \mathcal{O}, \mathcal{O}' \subset \mathbb{R}^m. \tag{3.22}$$

Equation (3.22) implies Claim 1 because its RHS does not change if we swap $\mathcal{O}$ and $\mathcal{O}'$. Denote E the RHS of (3.22), i.e.,

$$E := \mathrm{co}(\{0\} \cup \{q_D : D \in (\bar{\mathcal{A}} \cap H_{\mathcal{O}} \cap H_{\mathcal{O}'} \setminus \{0\})\}),$$

and observe that $E \subseteq A_{\mathcal{O}'} \cap H_{\mathcal{O}}$, since $q_D \in A_{\mathcal{O}'} \cap H_{\mathcal{O}}$ for every $D \in \bar{\mathcal{A}} \cap H_{\mathcal{O}} \cap H_{\mathcal{O}'} \setminus \{0\}$, by Step 1.

In order to prove (3.22), we need to prove the reverse inclusion, hence, since $A_{\mathcal{O}'} \cap H_{\mathcal{O}}$ is a compact convex set, we can assume by contradiction that (by the Krein–Milman theorem) there exists an extreme point z of $A_{\mathcal{O}'} \cap H_{\mathcal{O}}$ that does not belong to E.

Since $z \in A_{\mathcal{O}'} \subset B_{\mathcal{O}'}$, we can write it as a convex combination

$$z = \sum_{k=1}^{K} \lambda_k q_{D^k},$$

where we recall that $q_{D^k} = \frac{D^k}{c_{D^k}}$, $D^k \in \bar{\mathcal{A}}$, and $c_{D^k} := c_{\bar{D}^k,0}$ are those defined in (3.8), with $\mathcal{C}_{\mathcal{O}'}$ in place of $\mathcal{C}$. Our aim is to replace the elements q_{D^k} appearing in the convex combination above with suitable elements q_{F^k}, where the points F^k belong to $\bar{\mathcal{A}} \cap H_{\mathcal{O}} \cap H_{\mathcal{O}'}$. First we will prove only that one can write z as a convex combination of 0 and some points q_{G^k}, where the points G_k can be chosen in $\bar{\mathcal{A}} \cap \mathrm{span}\{H_{\mathcal{O}} \cap H_{\mathcal{O}'}\}$. Then we will reduce this to the points q_{F^k} with F^k in $\bar{\mathcal{A}} \cap H_{\mathcal{O}} \cap H_{\mathcal{O}'}$ which would give a contradiction to the fact that $z \notin E$.

Proof of Claim 1: *first reduction.* For $k = 1, \dots, K$, we define vectors $G^k := (g_1^k, \dots, g_N^k) \in \bar{\mathcal{A}}$ by

$$\begin{cases} g_j^k := 0 \text{ if } z_j = 0, \\ g_j^k := d_j^k \text{ otherwise.} \end{cases} \tag{3.23}$$

Note that, as a consequence of (3.23) and the fact that $z \in H_{\mathcal{O}'} \cap H_{\mathcal{O}}$, for every k we have that $G^k \in \bar{\mathcal{A}} \cap \mathrm{span}\{H_{\mathcal{O}} \cap H_{\mathcal{O}'}\}$. Moreover

$$z = \sum_{k=1}^{K} \lambda_k \frac{G^k}{c_{D^k}}. \tag{3.24}$$

We also have that

$$c_{G^k} \le c_{D^k} \tag{3.25}$$

by the monotonicity of the cost $\mathcal{C}_{\mathcal{O}'}$. Hence we can write, denoting $\lambda_k' := \lambda_k \frac{c_{G^k}}{c_{D^k}} \le \lambda_k$,

$$z = \sum_{k=1}^{K} \lambda_k' q_{G^k}.$$

Hence we have written z as a convex combination of 0 and some q_{G^k} for points

$$G^k \in \bar{\mathcal{A}} \cap \operatorname{span}\{H_{\mathcal{O}} \cap H_{\mathcal{O}'}\}.$$

Proof of Claim 1: *second reduction.* Let now $\eta := (\eta_1, \dots, \eta_N)$ be a point in the relative interior of $H_{\mathcal{O}} \cap H_{\mathcal{O}'}$. Note that one can choose $\eta = \tau_{\mathcal{O}} + \tau_{\mathcal{O}'}$. Indeed, the relative interior of $H_{\mathcal{O}} \cap H_{\mathcal{O}'}$ is the set of points $p = (p_1 \dots, p_N) \in \mathbb{R}^N$ such that

$$\begin{cases} p_j = 0 \text{ if } (\tau_{\mathcal{O}})_j (\tau_{\mathcal{O}'})_j = -1, \\ \operatorname{sign}(p_j) = (\tau_{\mathcal{O}})_j \text{ if } (\tau_{\mathcal{O}})_j (\tau_{\mathcal{O}'})_j = 1. \end{cases}$$

For $k = 1, \dots, K$, we define vectors $F^k := (f_1^k, \dots, f_N^k) \in \bar{\mathcal{A}}$ by

$$\begin{cases} f_j^k := g_j^k \text{ if } \eta_j g_j^k \geq 0, \\ f_j^k := -g_j^k \text{ otherwise.} \end{cases} \tag{3.26}$$

Since, for every k, $G^k \in \bar{\mathcal{A}} \cap \operatorname{span}\{H_{\mathcal{O}} \cap H_{\mathcal{O}'}\}$, then $F^k \in \bar{\mathcal{A}} \cap H_{\mathcal{O}} \cap H_{\mathcal{O}'}$. Indeed $H_{\mathcal{O}} \cap H_{\mathcal{O}'}$ is the set of points $p = (p_1, \dots, p_N) \in \operatorname{span}\{H_{\mathcal{O}} \cap H_{\mathcal{O}'}\} \subset \mathbb{R}^N$ such that $p_j \eta_j \geq 0$ for every j. Since $z \in H_{\mathcal{O}} \cap H_{\mathcal{O}'}$ and, since $\mathcal{C}_{\mathcal{O}'}$ satisfies (3.7), it holds $c_{G^k} = c_{F^k}$ for every k, then

$$z = \sum_{k=1}^{K} \lambda'_k q_{G^k} \preceq \sum_{k=1}^{K} \lambda'_k \frac{F^k}{c_{G^k}} = \sum_{k=1}^{K} \lambda'_k q_{F^k} =: z', \tag{3.27}$$

where we remind that $\preceq$ is the order relation defined in (2.1).

Proof of Claim 1: *last contradiction, i.e.,* $z = z'$. We observe that by (3.27) and since $F^k \in \bar{\mathcal{A}} \cap H_{\mathcal{O}} \cap H_{\mathcal{O}'}$ it follows that $z' \in E$. We will prove now that $z' = z$, which would be a contradiction, since $z \notin E$ by assumption. Assume by contradiction that $z' \neq z$ and observe that

$$z_j = 0 \text{ for some } j \Rightarrow z'_j = 0. \tag{3.28}$$

Indeed, (3.23) yields that $g_j^k = 0$ for every k if $z_j = 0$, and then by (3.26) also $f_j^k = 0$. Therefore, by (3.27),

$$z'_j = \sum_{k=1}^{K} \lambda'_k \frac{f_j^k}{c_{F^k}} = 0.$$

Define now, for $\varepsilon > 0$, $w_\varepsilon := z - \varepsilon(z' - z)$. Note that, by (3.28), we have $w_\varepsilon \preceq z \preceq z'$ for ε sufficiently small. This implies that, for ε sufficiently small, $w_\varepsilon \in A_{\mathcal{O}'} \cap H_{\mathcal{O}}$, because $A_{\mathcal{O}'} \cap H_{\mathcal{O}}$ is an intersection of monotone sets, therefore monotone. Hence we can write z as a nontrivial convex combination of the points w_ε and z' in $A_{\mathcal{O}'} \cap H_{\mathcal{O}}$, which violates the extremality of z. ∎

As we observed before, Theorem 2.4 provides a proof of the existence of a solution to the MMTP, which does not require a proof of the lower semicontinuity of the energy $\mathbb{E}$.

COROLLARY 3.3. *Under assumptions* (i), (ii), (iii′) *on the cost functional* $\mathcal{C}$, *the problems* MMTP *and* MMP *admit a solution.*

Proof. The fact that the MMP admits a solution follows from Theorem 1.10. The fact that the MMTP admits a solution then follows from Theorem 2.4. ∎

The property (iii′) of Definition 2.1 appears to be the most restrictive. However, at least in the single-material case is also necessary to obtain the equivalence with the MMP.

THEOREM 3.4. *If $m = 1$, and $\mathcal{C}$ is a cost that fulfills* (i), (ii) *of Definition* 2.1, *then* (iii′) *holds if and only if there exists a monotone norm $\|\cdot\|$ that satisfies* (3.1).

Proof. One implication has already been proven in Theorem 3.2. Suppose now that there exists a monotone norm $\|\cdot\|$ on $\mathbb{R}^N$ that satisfies (3.1). Fix any $E \in \mathcal{A}$, where $\mathcal{A}$ is defined at the beginning of the proof of Theorem 3.2. We can write E as

$$E = \sum_{k\in K} \mathbf{e}_{i_k},$$

K being a subset of $\{1, \dots, N\}$. We denote with $\#K$ the cardinality of K. By (3.1), we have

$$\|E\| = \mathcal{C}(\#K) = \|F\| \tag{3.29}$$

for any $F \in \mathcal{A}$ such that $F = \sum_{k\in K'} \mathbf{e}_{i_k}$ and $\#K' = \#K$. For every $\ell \in K$ define $K_\ell := K \setminus \{\ell\}$. Define $E_\ell := \sum_{k\in K_\ell} \mathbf{e}_{i_k}$. Therefore,

$$(\#K - 1)E = \sum_{\ell\in K} E_\ell$$

and, by (3.29), we get

$$\begin{aligned}(\#K-1)\mathcal{C}(\#K) = (\#K-1)\|E\| &= \Big\|\sum_{\ell\in K} E_\ell\Big\| \le \sum_{\ell\in K}\|E_\ell\| \\ &= \sum_{\ell\in K}\mathcal{C}(\#K-1) = \#K\mathcal{C}(\#K-1).\end{aligned}$$

Since $K \subset \{1, \dots, N\}$ is arbitrary, we obtain, $\forall x \in \{2, \dots, N\}$,

$$\frac{C(x)}{x} \le \frac{C(x-1)}{x-1}$$

and, by induction,

$$\frac{C(x)}{x} \le \frac{C(y)}{y} \text{ if } 1 \le y \le x.$$

∎

It is well known that, if $\mathcal{C} : [0, \infty) \to [0, \infty)$ is concave and $\mathcal{C}(0) = 0$, then the quantity $\frac{\mathcal{C}(x)}{x}$ is nonincreasing. Hence we obtain the following corollary.

COROLLARY 3.5. *In the case $m = 1$, Theorem* 3.2 *holds if* (iii′) *is replaced by the request that $\mathcal{C}$ coincide on $\mathbb{N}$ with a concave function.*

Remark 3.6. The previous corollary allows us to include in the list of cost functionals for which Theorem 2.4 applies the cost considered in [9], which describes a model for urban planning (or a discrete version of it, in our case). More precisely the cost is $\mathcal{C}(z) = \min\{az; z + b\}$ with $a > 1, b > 0$, which is clearly concave.

4. Properties of minimizers. Most of the regularity properties for classical continuous models of single-material branched transportation, such as single-path properties and finite tree structure away from the boundary (see [3]) are deduced using a crucial property of discrete optimal networks, which is the absence of cycles. Even in our case, removing cycles from each of the m components of a competitor for the MMTP does not increase the energy (note that we have used this fact in the proof of Theorem 2.4). Nevertheless it might happen that the operation does not *strictly* reduce the energy as well and, in particular, minimizers could contain cycles. The aim of this section is to provide a simple example of such phenomena.

Consider the multimaterial cost

$$\mathcal{C}(\theta_1, \theta_2, \theta_3, \theta_4) = \max\{|\theta_1| + |\theta_2| + |\theta_3|, |\theta_4|\}.$$

Since the cost is additive in the first three variables, it follows that, for every boundary datum $\mathcal{B}$ whose fourth component is trivial, a solution to the associated MMTP can be obtained as a superposition of the solutions of three single-material problems (see Remark 5.1). Namely, those minimization problems whose boundaries are defined, respectively, by the three components $\mathcal{B}_1$, $\mathcal{B}_2$, and $\mathcal{B}_3$ of $\mathcal{B}$ (and the corresponding single-material cost is simply $\mathcal{C}(\theta) = |\theta|$ for $\theta \in \mathbb{Z}$).

Let us now fix a specific boundary $\mathcal{B}$. Take three noncollinear points x_1, x_2, and x_3 on $\mathbb{R}^2$ and denote

$$\mathcal{B} := (-1, 0, 1, 0)\delta_{x_1} + (1, -1, 0, 0)\delta_{x_2} + (0, 1, -1, 0)\delta_{x_3}.$$

By the discussion above, a minimizer for the MMTP associated with the cost $\mathcal{C}$ for the boundary $\mathcal{B}$ is the 1-dimensional integral $\mathbb{Z}^4$-current T, which is written in component form as $T := (T_1, T_2, T_3, 0)$, where

(i) $T_1 := [\![\overline{x_1x_2}, \tau_1, 1]\!]$ is the classical integral current associated with the segment $\overline{x_1, x_2}$ oriented from x_1 to x_2 with unit multiplicity;

(ii) $T_2 := [\![\overline{x_2x_3}, \tau_2, 1]\!]$;

(iii) $T_3 := [\![\overline{x_3x_1}, \tau_3, 1]\!]$.

Observe also that the 1-dimensional integral $\mathbb{Z}^4$-current $T' := (T_1, T_2, T_3, T_1+T_2+T_3)$ satisfies $\mathbb{E}(T') = \mathbb{E}(T)$, and since $\partial(T_1+T_2+T_3) = 0$, it follows that $\partial T' = \partial T$, hence T' is also a minimizer of the MMTP associated with $\mathcal{B}$. Observe that not only T' contains a topological cycle in its support (that property holds for T itself), but the fourth component of T' contains a cycle (actually it *is* a cycle) in the sense of currents.

One could find this example unsatisfactory, because the material associated with the cyclic component of T' does not appear in the boundary datum. Nevertheless it is easy to modify the example above in order to add the fourth material in the boundary datum, still obtaining the previous phenomenon. More precisely, denoting T_4 a nontrivial oriented segment which is "very far" from the supports of T_1, T_2, and T_3, then clearly the current $T'' := T' + (0, 0, 0, T_4)$ is also a minimizer for the corresponding boundary: roughly speaking, even if in general it would be convenient for the fourth material to interact with the first three, there is no convenience in this case, due to the large distance of the corresponding sources and sinks (see Figure 7).

As was observed in [10], in order to get better properties of minimizers of the single-material branched transportation problem it is necessary to require the concavity of the cost. In our case we will require that the cost is concave in every component. In this case it is possible to prove that there exists a solution T of the MMTP whose components T_i ($i = 1, \ldots, m$) are all supported on trees (in particular they are acyclic currents). Let us stress that this does not imply the absence of loops in the support

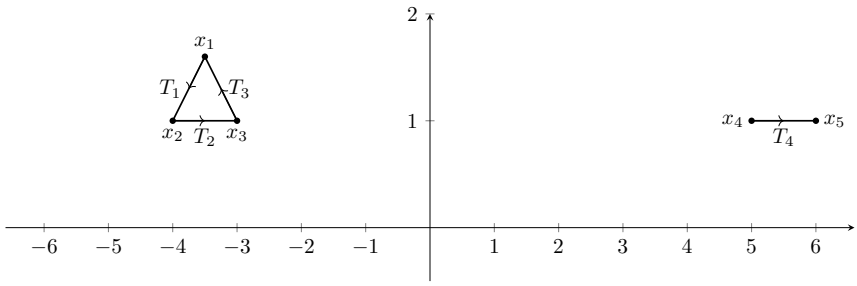

FIG. 7. *The component T_4 does not interact with T_1, T_2, and T_3 because the corresponding boundaries are too far away.*

of T, but only in the support of each T_i. More precisely, we have the following two propositions, which are the analogue of [10, Lemma 2.6, Remark 2.7]. The proofs are also analogous. We say that a multimaterial cost $\mathcal{C} : \mathbb{Z}^m \to \mathbb{R}$ is *concave* (respectively, *strictly concave*) if it coincides on $\mathbb{Z}^m$ with a function $f : \mathbb{R}^m \to \mathbb{R}$ which is concave (respectively, strictly concave) in every component, i.e., $f(z_1, \dots, z_m)$ is a concave (resp., strictly concave) function of each variable z_i. We call a *tree* a set in $\mathbb{R}^d$ which does not contain the support of any nontrivial closed curve.

PROPOSITION 4.1. *Let $\mathcal{C}$ be a concave multimaterial cost. Then for every 1-dimensional integral $\mathbb{Z}^m$-current T, there exists another current T' with $\partial T' = \partial T$, $\mathbb{E}(T') \le \mathbb{E}(T)$, and T'_i is supported on a tree for every $i = 1, \dots, m$.*

PROPOSITION 4.2. *Let $\mathcal{C}$ be a strictly concave multimaterial cost. Then for every 1-dimensional integral $\mathbb{Z}^m$-current T which is a solution to the MMTP associated with its boundary, every component T_i of T is supported on a tree.*

5. Examples. In this section, we consider some concrete cost functionals $\mathcal{C}$ and we exhibit a possible norm $\|\cdot\|$ which turns a MMTP associated with such cost into an MMP. At the end of the section we also provide some examples of calibrations.

5.1. Examples of costs.

(1) *Steiner energy.* For $m = 1$, let

$$\mathcal{C}(z) := \begin{cases} 0, & z = 0, \\ 1, & z \neq 0. \end{cases}$$

The minimization of the energy $\mathbb{E}$ associated with such cost corresponds to the minimization of the size functional. Clearly the corresponding norm $\|\cdot\|$ on $\mathbb{R}^N$ given by Theorem 2.4 is simply the supremum norm.

(2) *Gilbert–Steiner energy.* For $m = 1$, fix $0 \le \alpha \le 1$ and let

$$\mathcal{C}(z) := \begin{cases} 0, & z = 0, \\ |z|^\alpha, & z \neq 0. \end{cases}$$

The minimization of the corresponding energy $\mathbb{E}$ corresponds to the minimization of the α-mass (see, e.g,. [42]). As is shown in [31], the corresponding norm $\|\cdot\|$ on $\mathbb{R}^N$ is the p-norm with $p = \frac{1}{\alpha}$. Note that for $\alpha = 0$ we recover the Steiner energy.

(3) *Linear combinations.* For $m = 1$, fix $K \in \mathbb{N}$ and for $k = 1, \dots, K$ let $0 \le \alpha_k \le 1$ and let $\lambda_k > 0$. Define

$$\mathcal{C}(z) := \begin{cases} 0, & z = 0, \\ \sum_{k=1}^{K} \lambda_k |z|^{\alpha_k}, & z \neq 0. \end{cases}$$

It is easy to see that $\mathcal{C}$ satisfies properties (i), (ii), and (iii′) of Definition 2.1. The corresponding norm $\|\cdot\|$ on $\mathbb{R}^N$ is $\|x\| = \sum_{k=1}^{K} \lambda_k |x|^{p_k}$, where $p_k = \frac{1}{\alpha_k}$. Such a cost is considered for example in [14] in order to approximate the Steiner energy and to perform numerical simulations.

(4) *Supremum of costs.* For $m = 1$, fix $K \in \mathbb{N}$ and for $k = 1, \dots, K$ let $\mathcal{C}_k$ be a cost functional satisfying properties (i), (ii), and (iii′) of Definition 2.1. Define

$$\mathcal{C}(z) := \max_{k=1,\dots,K} \mathcal{C}_k(x).$$

The corresponding norm $\|\cdot\|$ on $\mathbb{R}^N$ is the maximum of the norms associated with each $\mathcal{C}_k$.

(5) *PLC technology.* For $m = 2$, let $0 < \alpha_1 \ll \alpha_2 \le 1$. Define

$$\mathcal{C}(z_1, z_2) := \max\{\lambda_1 |z_1|^{\alpha_1}; \lambda_2 |z_2|^{\alpha_2}\}$$

with $\lambda_1, \lambda_2 > 0$. A monotone norm $\|\cdot\|$ on $\mathbb{R}^N$ which satisfies (3.1) is

$$\|(x_1, \dots, x_{N_1}, y_1, \dots, y_{N_2})\| = \max\{\lambda_1 |(x_1, \dots, x_{N_1})|_{p_1}; \lambda_2 |(y_1, \dots, y_{N_2})|_{p_2}\},$$

where $p_i = \alpha_i^{-1}$ for $i = 1, 2$. The fact that $\alpha_1 \ll \alpha_2$ expresses the idea that once the infrastructure transporting the second material (i.e., the electricity) is built one can add "almost any" quantity of the first material (i.e., internet signal) for free.

(6) *Composite multimaterial costs.* For general $m \ge 2$, consider any monotone norm $|\cdot|_\star$ in $\mathbb{R}^m$ and single-material costs $\mathcal{C}_1, \dots, \mathcal{C}_m : \mathbb{Z} \to \mathbb{R}$, associated with monotone norms $\|\cdot\|^1, \dots, \|\cdot\|^m$ on $\mathbb{R}^{N_1}, \dots, \mathbb{R}^{N_m}$, respectively. Define

$$\mathcal{C}(z_1, \dots, z_m) := |(\mathcal{C}_1(z_1), \dots, \mathcal{C}_m(z_m))|_\star.$$

A monotone norm $\|\cdot\|$ on $\mathbb{R}^N$ which satisfies (3.1) for the multimaterial cost $\mathcal{C}$ is

$$\|(x_1, \dots, x_N)\| = |(\|(x_1, \dots, x_{N_1})\|^1, \dots, \|(x_{N-N_m+1}, \dots, x_N)\|^m)|_\star.$$

Observe that the cost associated with the PLC technology corresponds to the choice $|\cdot|_\star = \|\cdot\|_\infty$ on $\mathbb{R}^2$, $\mathcal{C}_1(z) = \lambda_1 |z|^{\alpha_1}$, and $\mathcal{C}_2(z) = \lambda_2 |z|^{\alpha_2}$.

(7) *Mailing problem.* For general $m \ge 2$ and $\alpha > 0$ consider the following cost

$$\mathcal{C}(z_1, \dots, z_m) := \Big(\sum_{i: z_i \ge 0} z_i \Big)^\alpha + \Big| \sum_{i: z_i < 0} z_i \Big|^\alpha.$$

Observe that this multimaterial cost does not satisfy (3.7). A monotone norm $\|\cdot\|$ on $\mathbb{R}^N$ which satisfies (3.1) is clearly

$$\|(x_1, \dots, x_N)\| = \|x_+\|_{\ell^p} + \|x_-\|_{\ell^p},$$

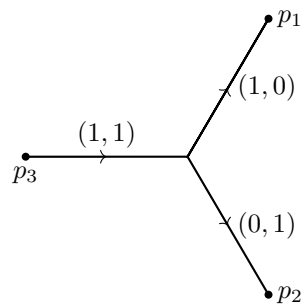

FIG. 8. *A solution to the mailing problem with Steiner cost for the boundary $\mathcal{B}$.*

where $p = \alpha^{-1}$ and x_+ (respectively, x_-) is obtained by x setting all the negative (respectively, positive) coordinates of x equal to zero. Such cost is well suited to giving a better description of the discrete *mailing problem* (see [3]), encoding the fact that, on every branch of a transportation network, there is a gain in the cost of the transportation in grouping particles flowing with the same orientation, but there should be no gain for two groups of particles flowing with opposite orientations.

5.2. Examples of calibrations. We now focus on elementary multimaterial transportation problems with different costs, for which we are able to exhibit constant calibrations.

(1) *Mailing problems with Steiner cost.* Let us consider the multimaterial cost $\mathcal{C} : \mathbb{Z}^2 \to \mathbb{R}$ defined by $\mathcal{C}(x, y) = |x|^0 + |y|^0$, where we mean that $0^0 = 0$.
First, we consider the vertices of an isosceles triangle in $\mathbb{R}^2$, for instance, $p_1 := (\ell, h)$, $p_2 := (\ell, -h)$, and $p_3 := (0, 0)$ for some positive numbers h, ℓ with $\ell \geq \sqrt{3}h$, and we fix as a boundary

$$\mathcal{B} := (-1, -1)\delta_{p_3} + (1, 0)\delta_{p_1} + (0, 1)\delta_{p_2}.$$

A solution to the MMTP associated with such boundary and cost is a 1-dimensional integral $\mathbb{Z}^2$-current supported on a Y-shaped graph, with angles of $2\pi/3$ between the segments at the junction point (see Figure 8).
In order to translate this into an MMP, we endow $\mathbb{R}^2$ with the norm $\|\cdot\|$ which has the unit ball depicted in Figure 9.
In this special case we have to solve an MMP for the same boundary $\mathcal{B}$. Now we show that the $\mathbb{R}^2$-valued differential 1-form represented by the matrix

$$\omega_1 := \begin{pmatrix} \frac{1}{2} & \frac{\sqrt{3}}{2} \\ \frac{1}{2} & -\frac{\sqrt{3}}{2} \end{pmatrix} \tag{5.1}$$

is a calibration for the minimizer. Indeed

$$\left\langle \omega_1; \left(1/2, \sqrt{3}/2\right), (1, 0) \right\rangle = \left\langle \omega_1; \left(1/2, -\sqrt{3}/2\right), (0, 1) \right\rangle = \langle \omega_1; (1, 0), (1, 1) \rangle = 1$$

and the form is constant, hence properties (i) and (ii) in Definition 1.12 are fulfilled. Moreover, to check (iii), notice that, for every $\phi \in \mathbb{R}$ and every pair

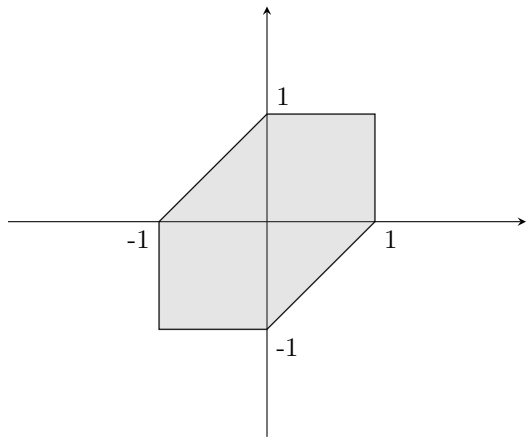

FIG. 9. *Unit ball for the norm $\|\cdot\|$ associated with the cost $\mathcal{C}$.*

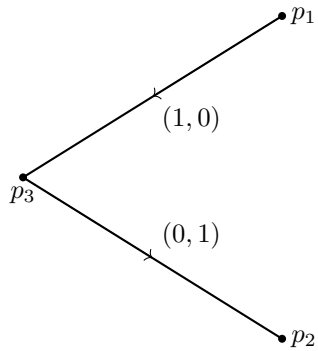

FIG. 10. *A solution to the mailing problem with Steiner cost for the boundary $\mathcal{B}'$.*

of $(g_1, g_2) \in \mathbb{R}^2$ with $\|(g_1, g_2)\| = 1$, we have

$$\begin{aligned}&|\langle \omega_1; (\cos\phi, \sin\phi), (g_1, g_2)\rangle| \\ &\quad = \left| \left(\frac{1}{2}\cos\phi + \frac{\sqrt{3}}{2}\sin\phi\right) g_1 + \left(\frac{1}{2}\cos\phi - \frac{\sqrt{3}}{2}\sin\phi\right) g_2 \right| \le 1\,,\end{aligned}$$

where the inequality can be inferred from that fact that the expression in the absolute value is linear in (g_1, g_2) and takes its maximum at some extremal point of the set depicted in Figure 9, where the values are $\pm(\frac{1}{2}\cos\phi + \frac{\sqrt{3}}{2}\sin\phi) = \pm(\sin(\frac{\pi}{6} + \phi)), \pm(\frac{1}{2}\cos\phi - \frac{\sqrt{3}}{2}\sin\phi) = \pm(\sin(\frac{\pi}{6} - \phi))$, and $\pm\cos\phi$.
Let us now fix as a boundary (supported on the same points)

$$\mathcal{B}' := (1, -1)\delta_{p_3} + (-1, 0)\delta_{p_1} + (0, 1)\delta_{p_2}.$$

A minimizer in this case is supported in the union of the two segments joining p_1 to p_3 and p_3 to p_2, respectively (see Figure 10).
A calibration is the $\mathbb{R}^2$-valued differential 1-form represented by the matrix

$$\omega_2 := \begin{pmatrix} -\cos\theta & -\sin\theta \\ \cos\theta & -\sin\theta \end{pmatrix},$$

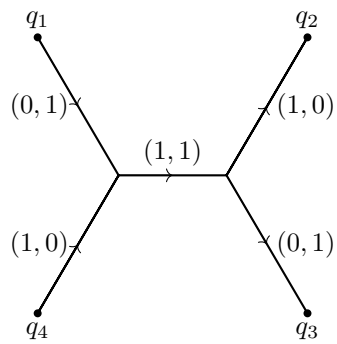

FIG. 11. *A solution to the mailing problem with Steiner cost for the boundary $\mathcal{B}''$.*

where θ is the positive angle between the segment $\overline{p_3p_1}$ and the horizontal axis. Again, properties (i) and (ii) of Definition 1.12 are verified by construction of this $\mathbb{R}^2$-valued constant 1-form. Moreover, to test (iii), we notice that, for every $\phi \in \mathbb{R}$ and every pair $(g_1, g_2) \in \mathbb{R}^2$ with $\|(g_1, g_2)\| = 1$, we have

$$\begin{aligned}&|\langle \omega_2; (\cos\phi, \sin\phi), (g_1, g_2)\rangle| \\ &\quad = |-(\cos\theta\cos\phi + \sin\theta\sin\phi)g_1 + (\cos\theta\cos\phi - \sin\theta\sin\phi)g_2| \le 1\,,\end{aligned}$$

again because the expression in the absolute value is linear in (g_1, g_2) and takes its maximum at some extremal point of the set depicted in Figure 9, where the values are $\pm(\cos\theta\cos\phi + \sin\theta\sin\phi) = \pm\cos(\theta - \phi)$, $\pm(\cos\theta\cos\phi - \sin\theta\sin\phi) = \pm\cos(\theta + \phi)$, and $\pm 2\sin(\theta)\sin(\phi)$ (observe that $\sin(\theta) \le \frac{1}{2}$ due to the choice of h and ℓ).

Last, let us consider a boundary datum which is supported on the vertices of a square, say $q_1 := (0,1), q_2 := (1,1), q_3 := (1,0), q_4 := (0,0)$. We set

$$\mathcal{B}'' := (0,-1)\delta_{q_1} + (1,0)\delta_{q_2} + (0,1)\delta_{q_3} + (-1,0)\delta_{q_4}.$$

A minimizer is given in Figure 11 and it is supported on the set Σ_1, which is one of the two well-known solutions to the Steiner tree problem for the vertices of the square. This is calibrated by the same ω_1 as in (5.1), for which all the checks have already been done.

Observe also that the other solution Σ_2 to the Steiner tree problem (namely, the one obtained from a rotation of Σ_1 by $90°$) does not support any solution to the MMTP for the boundary $\mathcal{B}''$. Indeed there is only a 1-dimensional integral $\mathbb{Z}^2$-current T with $\partial T = \mathcal{B}''$ supported on Σ_2, and by direct computation one can see that this is not a minimizer. Note that T has a vertical stretch (oriented by the vector $(0,1)$) carrying the multiplicity $(-1,1)$ and we have $\langle \omega_1; (0,1), (-1,1)\rangle = \sqrt{3}$, hence property (i) of Definition 1.12 is not satisfied. Since a calibration always calibrates all the minimizers of the problem, this is another proof that T is not a minimizer.

(2) *Mailing problems with Gilbert–Steiner cost.* Let us consider the multimaterial cost $\mathcal{C} : \mathbb{Z}^2 \to \mathbb{R}$ defined by $\mathcal{C}(x,y) = \sqrt{|x|^2 + |y|^2}$. Now consider the boundary datum

$$\mathcal{B} := (N,0)\delta_{r_1} + (0,1)\delta_{r_2} + (-N,-1)\delta_{r_3},$$

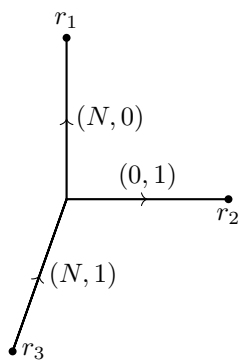

FIG. 12. *A solution to the mailing problem with the Gilbert–Steiner cost for the boundary $\mathcal{B}$.*

where $r_1 := (0,1), r_2 := (1,0), r_3 := (-\cos\tilde{\theta}, -\sin\tilde{\theta})$ with

$$\tilde{\theta} := \arccos\left(\frac{1}{\sqrt{N^2+1}}\right).$$

Then the Y-shaped graph made by three segments joining at the origin $(0,0)$ supports a solution of the MMTP (see Figure 12). To prove this, first we observe that the associated MMP for currents with coefficients in $\mathbb{Z}^{N+1}$ has boundary equal to

$$(-1,\dots,-1,-1)\delta_{r_3} + (1,\dots,1,0)\delta_{r_1} + (0,\dots,0,1)\delta_{r_2},$$

and a possible norm $\|\cdot\|$ on $\mathbb{R}^{N+1}$ associated with $\mathcal{C}$ is

$$\|(g_1,\dots,g_{N+1})\| = \left|\left(\sum_{j=1}^{N}|g_j|, g_{N+1}\right)\right|.$$

Next we check that a constant calibration for such MMP is given by the $\mathbb{R}^{N+1}$-valued differential 1-form represented by

$$\omega := \begin{pmatrix} 0 & 1 \\ \vdots & \vdots \\ 0 & 1 \\ 1 & 0 \end{pmatrix}.$$

In fact, (i) holds since

$$\left\langle \omega; \left(\frac{1}{\sqrt{N^2+1}}, \frac{N}{\sqrt{N^2+1}}\right), (1\dots,1,1)\right\rangle = \sqrt{N^2+1} = \mathcal{C}(N,1),$$

$$\langle \omega; (0,1), (1,\dots,1,0)\rangle = N = \mathcal{C}(N,0),$$

and

$$\langle \omega; (1,0), (0,\dots,0,1)\rangle = 1 = \mathcal{C}(0,1).$$

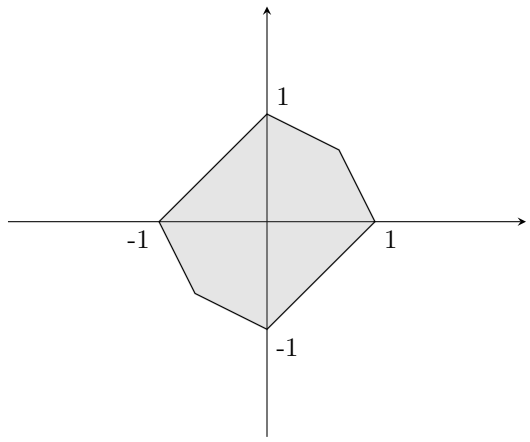

FIG. 13. *A norm associated with the cost $\mathcal{C}$.*

Property (ii) is satisfied, as usual, because ω is constant. Moreover, for every $\phi \in \mathbb{R}$ and every $(g_1, \dots, g_{N+1}) \in \mathbb{R}^{N+1}$ with $\|(g_1, \dots, g_{N+1})\| = 1$ one has

$$|\langle \omega; (\cos\phi, \sin\phi), (g_1, \dots, g_{N+1})\rangle| \le \left\langle (|\cos\phi|, |\sin\phi|); \left(|g_{N+1}|, \sum_{j=1}^{N} |g_j|\right)\right\rangle,$$

and by the definition of $\|\cdot\|$, the RHS is the scalar product between two vectors of $\mathbb{R}^2$ having unit Euclidean norm, hence it is bounded by 1.

(3) For the linear combinations of costs discussed in point (3) of the previous subsection, stepping back to the specific case of [14], we take $K = 2$ and $\alpha_1 = 0$, $\alpha_2 = 1$. Let us also assume that $\lambda_1 + \lambda_2 = 1$. Hence the single-material cost is $\mathcal{C}(z) = \lambda_1 |z|^0 + \lambda_2 |z|$.

We consider the irrigation problem with source of multiplicity 2 in the point p_3 and targets with multiplicity 1 in the points p_1, p_2, where p_1, p_2, and p_3 are as in point (1) of this subsection. As we have already observed, a norm on $\mathbb{R}^2$ which turns this single-material transport problem into an MMP is $\lambda_1 \|\cdot\|_\infty + \lambda_2 \|\cdot\|_1$. Nevertheless, since we are free to choose any monotone norm which coincides with the above on the positive orthant, then we decide to choose the norm $\|\cdot\|$ whose unit ball is depicted in Figure 13 (such choice is aimed at reducing the number of extreme points of the unit ball, which makes it easier to estimate the comass norm of the form).

The minimizer for the transportation problem is supported on a Y-shaped graph similar to that shown in point (1), in which the positive angle between the horizontal and the segment joining the branching point to p_1 is $\theta = \arccos((1+\lambda_2)/2)$. A calibration, in this case, is represented by

$$\omega := \begin{pmatrix} \frac{1+\lambda_2}{2} & \sqrt{1 - \left(\frac{1+\lambda_2}{2}\right)^2} \\ \frac{1+\lambda_2}{2} & -\sqrt{1 - \left(\frac{1+\lambda_2}{2}\right)^2} \end{pmatrix}.$$

To check property (i) of Definition 1.12 we observe that

$$\langle \omega; (1,0), (1,1)\rangle = 1 + \lambda_2 = \lambda_1 + 2\lambda_2 = \mathcal{C}(2),$$

$$\langle \omega; (\cos\theta, \sin\theta), (1,0)\rangle = 1 = \lambda_1 + \lambda_2 = \mathcal{C}(1),$$

and

$$\langle \omega; (\cos\theta, -\sin\theta), (0,1)\rangle = 1 = \lambda_1 + \lambda_2 = \mathcal{C}(1).$$

As usual, property (ii) is trivially verified. To check property (iii), we first observe that the extreme points of the unit ball for the norm $\|\cdot\|$ are $\pm((1+\lambda_2)^{-1}, (1+\lambda_2)^{-1})$, $\pm(1,0)$, and $\pm(0,1)$. Now, for every $\phi \in \mathbb{R}$ we have to check that, whenever $\|(g_1, g_2)\| \le 1$, it holds

$$\begin{aligned} &|\langle \omega; (\cos\phi, \sin\phi), (g_1, g_2)\rangle| \\ &\quad = |(\cos\theta\cos\phi + \sin\theta\sin\phi)g_1 + (\cos\theta\cos\phi - \sin\theta\sin\phi)g_2| \le 1\,. \end{aligned}$$

We observe that the values of the left-hand side of such an inequality at the extreme points above are, respectively, given by $2(1+\lambda_2)^{-1}|\cos(\theta)\cos(\phi)| = |\cos\phi|$, $|\cos\theta\cos\phi + \sin\theta\sin\phi| = |\cos(\theta-\phi)|$, and $|\cos\theta\cos\phi - \sin\theta\sin\phi| = |\cos(\theta+\phi)|$. Therefore property (iii) is verified.

Remark 5.1 (sum of single-material costs). To conclude this section, we add a simple, but very useful observation: when the multimaterial cost is a composite one (in the sense of point (6) in the previous subsection) but of the form

$$\mathcal{C}(z_1, \dots, z_m) = \mathcal{C}_1(z_1) + \cdots + \mathcal{C}_m(z_m)\,,$$

then the norm $|\cdot|_\star$ in $\mathbb{R}^m$ is the ℓ^1 norm. Hence roughly speaking, the materials "do not interact." More precisely, the minimizer is the sum of the individual minimizers of each (single-material) problem associated with the cost $\mathcal{C}_i$. This remark matches with the fact that the Monge-type optimal transport of atomic measures is made of "independent" segments joining directly the points at the boundary. Moreover, if one can calibrate with ω_i the problem concerning the ith material with cost $\mathcal{C}_i$, then a calibration of the global problem is a block-diagonal matrix where each block is given by ω_i.

Acknowledgments. We warmly thank D. Vittone for valuable discussions and the anonymous referees for suggesting several improvements.

REFERENCES

[1] F. L. Bauer, J. Stoer, and C. Witzgall, *Absolute and monotonic norms*, Numer. Math., 3 (1961), pp. 257–264.

[2] M. Bernot, V. Caselles, and J.-M. Morel, *The structure of branched transportation networks*, Calc. Var. Partial Differential Equations, 32 (2008), pp. 279–317.

[3] M. Bernot, V. Caselles, and J.-M. Morel, *Optimal Transportation Networks*, Lecture Notes in Math. 1955, Springer, Berlin, 2009.

[4] M. Bonafini, *Convex relaxation and variational approximation of the Steiner problem: Theory and numerics*, Geom. Flows, 3 (2018), pp. 19–27.

[5] M. Bonafini, G. Orlandi, and É. Oudet, *Variational approximation of functionals defined on 1-dimensional connected sets: The planar case*, SIAM J. Math. Anal., 50 (2018), pp. 6307–6332.

[6] M. Bonnivard, A. Lemenant, and F. Santambrogio, *Approximation of length minimization problems among compact connected sets*, SIAM J. Math. Anal., 47 (2015), pp. 1489–1529.

[7] A. Brancolini, G. Buttazzo, and F. Santambrogio, *Path functionals over Wasserstein spaces*, J. Eur. Math. Soc. (JEMS), 8 (2006), pp. 415–434.

[8] A. Brancolini and S. Solimini, *Fractal regularity results on optimal irrigation patterns*, J. Math. Pures Appl. (9), 102 (2014), pp. 854–890.

[9] A. Brancolini and B. Wirth, *Equivalent formulations for the branched transport and urban planning problems*, J. Math. Pures Appl. (9), 106 (2016), pp. 695–724.

[10] A. Brancolini and B. Wirth, *General transport problems with branched minimizers as functionals of 1-currents with prescribed boundary*, Calc. Var. Partial Differential Equations, 57 (2018), 82.

[11] L. Brasco, G. Buttazzo, and F. Santambrogio, *A Benamou–Brenier approach to branched transport*, SIAM J. Math. Anal., 43 (2011), pp. 1023–1040.

[12] M. Carioni and A. Pluda, *Calibrations for Minimal Networks in a Covering Space Setting*, ESAIM Control Optim. Calc. Var., to appear.

[13] M. Carioni and A. Pluda, *Calibrations in families for minimal networks*, PAMM Proc. Appl. Math. Mech., 18 (2018), e201800085.

[14] A. Chambolle, L. A. D. Ferrari, and B. Merlet, *A phase-field approximation of the Steiner problem in dimension two*, Adv. Calc. Var., 12 (2019), pp. 157–179.

[15] M. Colombo, A. De Rosa, and A. Marchese, *On the Well-Posedness of Branched Transportation*, preprint, https://arxiv.org/abs/1904.03683, 2019.

[16] M. Colombo, A. De Rosa, and A. Marchese, *Improved stability of optimal traffic paths*, Calc. Var. Partial Differential Equations, 57 (2018), 28.

[17] M. Colombo, A. De Rosa, and A. Marchese, *Stability for the mailing problem*, J. Math. Pures Appl. (9), to appear.

[18] M. Colombo, A. De Rosa, A. Marchese, and S. Stuvard, *On the lower semicontinuous envelope of functionals defined on polyhedral chains*, Nonlinear Anal., 163 (2017), pp. 201–215.

[19] S. Conti, A. Garroni, and A. Massaccesi, *Modeling of dislocations and relaxation of functionals on* 1*-currents with discrete multiplicity*, Calc. Var. Partial Differential Equations, 54 (2015), pp. 1847–1874.

[20] T. De Pauw and R. Hardt, *Rectifiable and flat G chains in a metric space*, Amer. J. Math., 134 (2012), pp. 1–69.

[21] G. Devillanova and S. Solimini, *Elementary properties of optimal irrigation patterns*, Calc. Var. Partial Differential Equations, 28 (2007), pp. 317–349.

[22] G. Devillanova and S. Solimini, *On the dimension of an irrigable measure*, Rend. Semin. Mat. Univ. Padova, 117 (2007), pp. 1–49.

[23] K. Dostert, *Powerline Communications*, Prentice Hall, Upper Saddle River, NJ, 2001.

[24] S. Even, A. Itai, and A. Shamir, *On the complexity of timetable and multicommodity flow problems*, SIAM J. Comput., 5 (1976), pp. 691–703.

[25] H. Federer, *Geometric Measure Theory*, Grundlehren Math. Wiss. 153. Springer, New York, 1969.

[26] H. C. Ferreira, L. Lampe, J. Newbury, and T. G. Swart, *Power Line Communications: Theory and Applications for Narrowband and Broadband Communications over Power Lines*, Wiley, Chichester, England, 2010.

[27] W. H. Fleming, *Flat chains over a finite coefficient group*, Trans. Amer. Math. Soc., 121 (1966), pp. 160–186.

[28] L. R. Ford, Jr. and D. R. Fulkerson, *Flows in networks*, Princeton Landmarks in Mathematics. Princeton University Press, Princeton, NJ, 2010.

[29] M. Goldman, *Self-similar minimizers of a branched transport functional*, Indiana Univ. Math. J., to appear.

[30] F. Maddalena, S. Solimini, and J.-M. Morel, *A variational model of irrigation patterns*, Interfaces Free Bound., 5 (2003), pp. 391–415.

[31] A. Marchese and A. Massaccesi, *An optimal irrigation network with infinitely many branching points*, ESAIM Control Optim. Calc. Var., 22 (2016), pp. 543–561.

[32] A. Marchese and A. Massaccesi, *The Steiner tree problem revisited through rectifiable G-currents*, Adv. Calc. Var., 9 (2016), pp. 19–39.

[33] A. Marchese, A. Massaccesi, S. Stuvard, and R. Tione, *A Multi-material Transport Problem with Arbitrary Marginals*, preprint, https://arxiv.org/abs/1807.10969, 2018.

[34] A. Massaccesi, E. Oudet, and B. Velichkov, *Numerical calibration of Steiner trees*, Appl. Math. Optim., 79 (2019), pp. 69–86.

[35] J.-M. Morel and F. Santambrogio, *The regularity of optimal irrigation patterns*, Arch. Ration. Mech. Anal., 195 (2010), pp. 499–531.

[36] E. Oudet and F. Santambrogio, *A Modica-Mortola approximation for branched transport and applications*, Arch. Ration. Mech. Anal., 201 (2011), pp. 115–142.

[37] P. Pegon, *On the Lagrangian branched transport model and the equivalence with its Eulerian formulation*, in Topological Optimization and Optimal Transport, Radon Ser. Comput. Appl. Math. 17, De Gruyter, Berlin, 2017, pp. 281–303.

[38] L. Simon, *Lectures on Geometric Measure Theory*, Proc. Centre Math. Appl. Anal. Austral. Nat. Univ., Australian National University Centre for Mathematical Analysis, Canberra, Australia, 1983.

[39] S. K. Smirnov, *Decomposition of solenoidal vector charges into elementary solenoids, and the structure of normal one-dimensional flows*, Algebra i Analiz, 5 (1993), pp. 206–238.

[40] B. White, *Rectifiability of flat chains*, Ann. Math. (2), 150 (1999), pp. 165–184.
[41] B. White, *The deformation theorem for flat chains*, Acta Math, 183 (1999), pp. 255–271.
[42] Q. Xia, *Optimal paths related to transport problems*, Commun. Contemp. Math., 5 (2003), pp. 251–279.
[43] Q. Xia, *Interior regularity of optimal transport paths*, Calc. Var. Partial Differential Equations, 20 (2004), pp. 283–299.
[44] Q. Xia, *Boundary regularity of optimal transport paths*, Adv. Calc. Var., 4 (2011), pp. 153–174.